FRONT SUSPENSION

SECTION F

CONTENTS

FRONT SUSPENSION

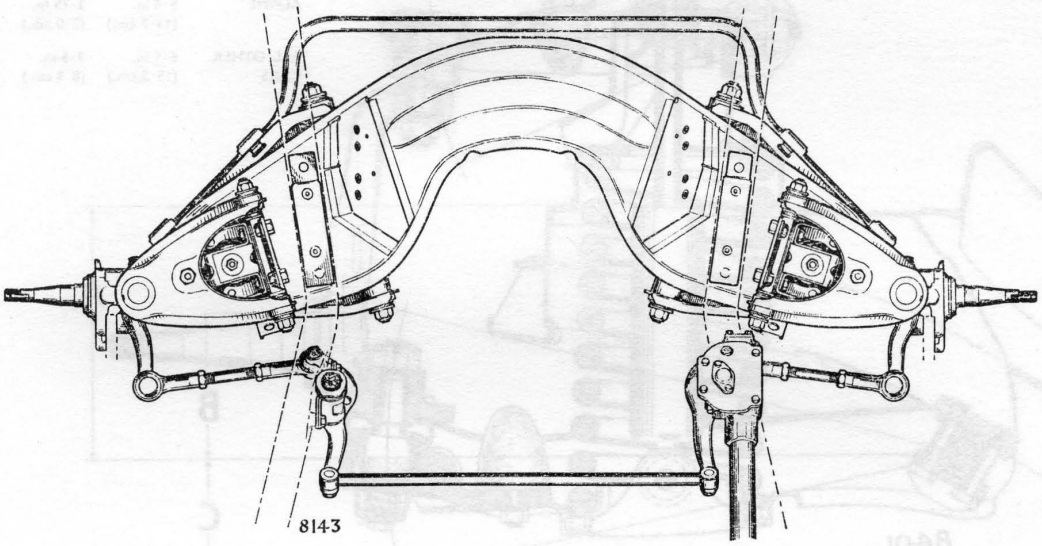

Fig. 1. *Plan view of front suspension assembly and steering linkage*

GENERAL DESCRIPTION

The front suspension is of the coil spring and wishbone type and consists of two independent units, each unit employing two links of unequal length. The links adopt a trailing attitude and are located on a pressed steel crossmember at their widest ends by means of long fulcrum pins and bonded rubber bushes.

Provision is made for camber angle adjustment by the insertion of shims between the top fulcrum pin and the crossmember.

The front edges of the two bottom links are connected by a single stabiliser bar.

Road shocks are absorbed by coil springs which are controlled by telescopic type shock absorbers situated inside the coil springs and located with rubber bushes at their top and bottom ends, between the crossmember and the bottom link respectively.

MAINTENANCE

Maintenance checks will be required at regular intervals as given in the "Owner's Service Book" and will include the following:—

(i) Checking the security of the top and bottom swivel bearings, top and bottom fulcrum pins, crossmember and stabiliser bar.

(ii) Checking the condition of the rubber covers on the top and bottom swivel bearings.

(iii) Checking camber angle and front wheel alignment.

(iv) Repacking hub bearings with grease and setting the endfloat.

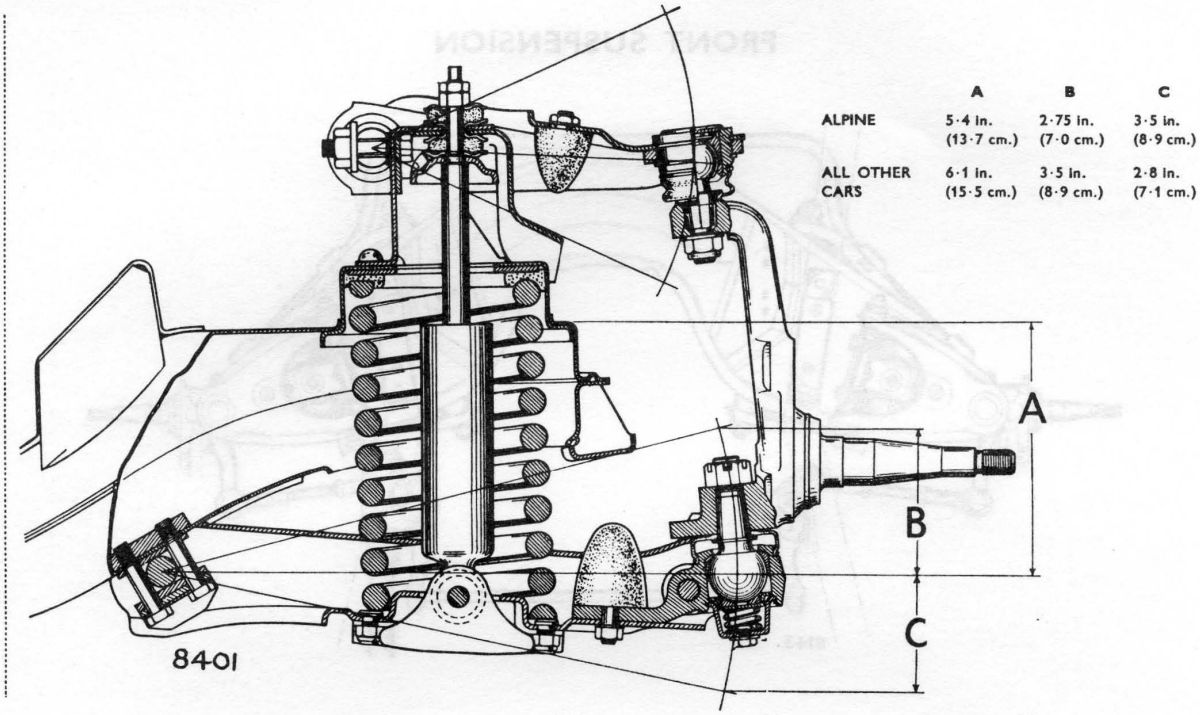

	A	B	C
ALPINE	5·4 in. (13·7 cm.)	2·75 in. (7·0 cm.)	3·5 in. (8·9 cm.)
ALL OTHER CARS	6·1 in. (15·5 cm.)	3·5 in. (8·9 cm.)	2·8 in. (7·1 cm.)

Fig. 2. *Part sectional view of front suspension unit*

FRONT SUSPENSION ANGLES AND STEERING ALIGNMENT

Detailed instructions are given in the following paragraphs for checking and adjusting camber angle, front wheel alignment and Ackerman angles, together with checking steering axis inclination and castor angles. The need for making a full front suspension angle and steering alignment check is only necessary after accident damage has been repaired, when excessive tyre wear is evident or steering difficulties are experienced.

At certain maintenance intervals only the camber angle and the front wheel alignment is checked. When any appreciable inaccuracy is discovered, it is advisable to make a full front suspension angle and steering alignment check before taking any corrective action because adjustment to camber angle and front wheel alignment will effect the steering axis inclination and Ackerman angles.

A considerable amount of weight is required making the work arduous and at times impracticable for some Service Repair Shops. To facilitate the loading of the car, it is loaded down only at the front end onto metal gap gauges inserted within the two front suspension units when only a reasonable amount of weight is required. Hardwood gap gauges are inserted on top of the rear axle to position the rear end of the car.

The two sets of gap gauges and the loading platform can be made in most Service Repair Shops. Dimensions and instructions for the gap gauges are given later in this Section.

To check the front suspension data as given in "General Data", the car must be loaded onto the front and rear gap gauges. When in this condition the quoted angles are equivalent to the angles obtained with the car in a fully and evenly loaded condition with the exception of the castor angle; this angle is calculated to take into account of the "nose down" attitude of the car.

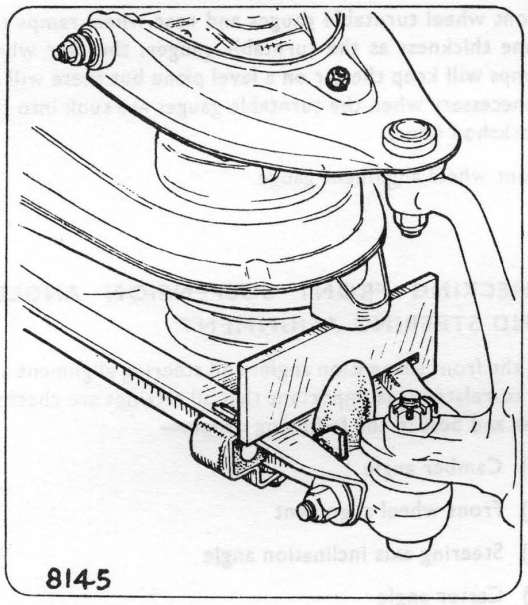

Fig. 3

Front gap gauge in position between the bottom link and the bump rubber stop. Churchill tool No. RG.403 for Alpine cars and RG.404 for all other cars

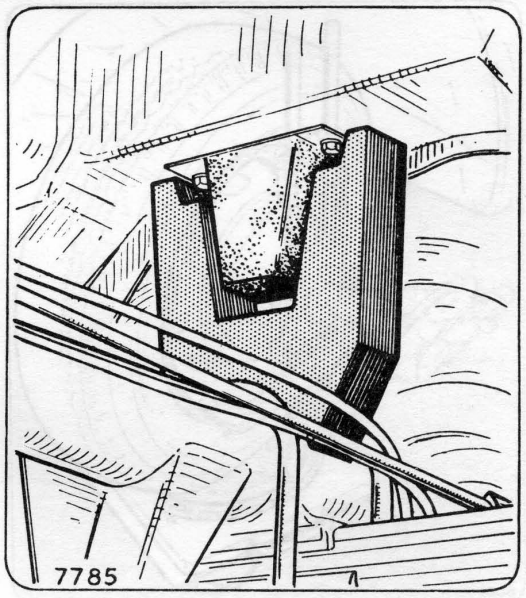

Fig. 4

Rear gap gauge in position; ensure that the gap gauge does not trap any hydraulic pressure pipes

PREPARATION OF CAR

When checking the front suspension angles and steering alignment, the following requirements must be met:—

1. The car must be standing on perfectly level ground or shop floor and in such a position to permit some forward movement as this is a necessity for some makes of front wheel alignment gauges.

2. The tyres must have the same amount of wear and be inflated to the normal running pressures, see under "Wheels and tyres—General Data Section".

3 The front hub bearings must have the correct amount of endfloat, see under "Front Suspension—General Data Section"

   The four track rod ball joints and the two top and two bottom swivel bearings must be in good condition, see under "Checking swivel bearings" in this Section and "Ball joints—To check for wear—Steering, Section J"

4. The front wheels must be checked for "run-out", see under "Checking wheel and tyre run-out—Wheels and tyres, Section L". Depending on the type of checking gauge in use, the points of maximum "run-out" are positioned so they are clear of the contact points of the checking gauge.

5. The front and rear suspension must be loaded down on to four gap gauges by placing weights on the front of the car. The approximate weight required is 300 lbs. (136 kg.) evenly distributed on a platform attached to the front of the car. The platform comprises a stout plank of wood supported by two suitably cranked steel bars $\frac{7}{8}$ in. (22 mm.) square inserted in the front jacking sockets.

   At the front, steel gap gauges are positioned between the bottom links and the underside of the bump rubber stop. At the rear, hardwood gap gauges are positioned between the top of the axle casing and the underframe; the hardwood gauges are shaped to clear the bump rubbers, fit on the axle casing and must avoid all hydraulic pressure pipes.

   Normally the rear end of the car has to be lifted by hand to enable the rear gap gauges to be positioned and subsequently gripped in position by the lowering of the car. When it is found that the gap gauges are a slack fit, a small weight can be placed on the rear end of the car to bring it down onto the gap gauges.

   Move the car backwards and forwards to settle the front wheels in the straight ahead and true running attitude; the camber angle and front wheel alignment can now be checked.

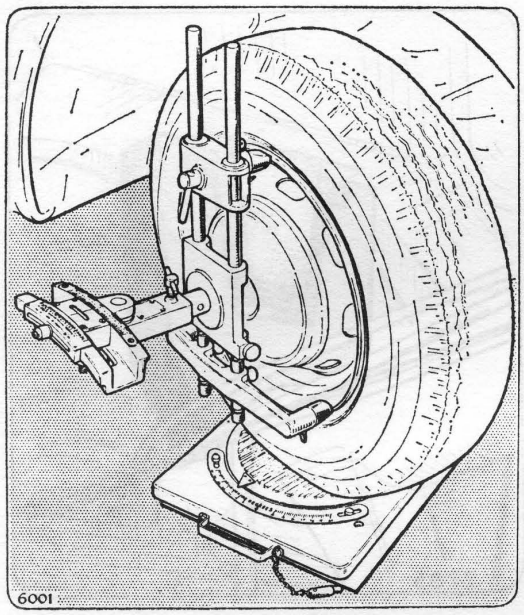

Fig. 5

Camber castor and steering axis inclination angle checking gauge in position with a turntable gauge beneath the front wheel

6. Keep the front wheels in the straight ahead position and slowly move the car forward until the front wheels are on the turntable gauges and the rear wheels on the wooden ramps, the latter will keep the car in a level plane, but these are unnecessary when the turntable gauges are sunk into the ground.

   Stop the car without applying the brakes so the free condition of the turntable gauges is not disturbed.

   Lock all four wheels by blocking the brake foot pedal in the down position; the castor, steering axis inclination and Ackerman angles can now be checked.

TOOLS AND APPLIANCES

There are many different types of tools and appliances available for checking the front suspension angles and steering alignment but in every instance the manufacturers instructions must be carefully observed and the car loaded onto the gap gauges.

Any reputable make may be used, the special tools shown in this Section are obtainable from Messrs. V. L. Churchill & Co. Ltd. and a full list will be found in Section "S" of this manual. The following tools will be required:—

Camber, castor and steering axis inclination gauges.

Front wheel turntable gauges and rear wheel ramps the same thickness as the turntable gauges; the rear wheel ramps will keep the car on a level plane but these will be unnecessary when the turntable gauges are sunk into the workshop floor.

Front wheel alignment gauge.

CHECKING FRONT SUSPENSION ANGLES AND STEERING ALIGNMENT

As the front suspension angles and steering alignment are all co-related it is important that all settings are checked first and best in the following order:—

(i) Camber angle

(ii) Front wheel alignment

(iii) Steering axis inclination angle

(iv) Castor angle

(v) Ackerman angles

and the findings analysed, see under "Included angle" before any corrective action is taken.

An exception to the foregoing order is made at certain maintenance intervals when only the camber angle and front wheel alignment is checked. However, it is advisable when any appreciable inaccuracy is discovered to make a full front suspension angle and steering alignment check before taking any corrective action because adjustment to camber angle and front wheel alignment will alter the steering axis inclination and Ackerman angles.

Camber angle

Camber angle is the angle of inclination of the front wheel from the vertical when viewed from the front. Outward inclination at the top of the wheel is termed "positive" while inward inclination is termed "negative".

The camber angle is adjusted by positioning shims between the top fulcrum pin and the crossmember.

The camber angle is given in the "General Data Section".

The relationship between camber angle, front wheel alignment and steering axis inclination angle is such that front wheel alignment and steering axis inclination will alter as the camber angle alters. It is advisable, therefore, to check the steering axis inclination angle before adjusting the camber angle, see under "Included angle" and after adjusting the camber angle check the front wheel alignment and adjust as necessary.

To check

1. Prepare the car, see under "Preparation of car".
2. Apply a suitable camber angle checking gauge to the front wheel and check the camber angle, exercising care to follow the gauge manufacturer's instructions and avoiding wheel run-out. Note the gauge reading.
3. Effect the same procedure with the opposite front wheel and note the gauge reading.
4. Check the steering axis inclination angle, see under "Steering axis inclination angle—To check".

To adjust (Fig 8)

Before making any adjustment to the camber angle, calculate the included angle, see under "Included angle". When adjustment is necessary proceed as follows:—

1. Remove the weights, gap gauges and jack up the front of the car using a wooden beam between the jack head and the crossmember. Remove the front wheel and jack up the bottom link to relieve the strain on the top fulcrum pin bolts.
2. Slacken, *but do not remove*, the top fulcrum pin bolts.
3. To increase the camber angle, move the required thickness of shims from between the crossmember and the outer face of the fulcrum pin (position A) to between the inner face of the fulcrum pin and the attachment plate (position B). Any short alignment shims must be left undisturbed.

   To decrease the camber angle, add the required thickness of new shims between the crossmember and the outer face of the fulcrum pin (position A). Any short alignment shims must be left undisturbed.
4. Tighten the two top fulcrum pin bolts.
5. Refit the front wheel and remove the jack from under the bottom link.
6. Adjust the camber angle of the opposite front wheel as necessary, in a similar manner.
7. Recheck the camber angle and readjust as necessary, check and adjust the front wheel alignment as necessary, see under "Front wheel alignment".

Front wheel alignment

The front wheel alignment is considered to "toe-in" when the setting of the front wheels is such that the distance between the front of the wheels is less than that at the rear of the wheels, when taken in the same plane.

Conversely, it is considered to "toe-out" when the distance at the front is greater.

Front wheel alignment is sensitive to the camber angle and will alter as camber angle alters. It is advisable, therefore, to adjust front wheel alignment only when the camber angle is known to be correct.

Front wheel alignment will effect the Ackerman angles and even when the front wheel alignment is correct, the Ackerman angles could be outside the specified limits and result in excessive and unaccountable tyre wear.

To guard against this eventuality, on completion of any front wheel alignment adjustment, ensure that the two track rods are both of the same length.

The front wheel alignment is given in the "General Data Section".

To check

1. Prepare the car, see under "Preparation of car", check and adjust the camber angle as necessary, see under "Camber angle—To check".
2. Apply a suitable front wheel alignment checking gauge to the front wheels, exercising care to follow the gauge manufacturer's instructions and avoiding any front wheel "run-out". Note the gauge reading.

To adjust

1. Slacken the two ball joint locknuts on both track rods; the outer locknuts have left-hand threads and the inner locknuts have right-hand threads.
2. Lengthen or shorten *both* track rods the required amount by rotating the cross tubes as necessary; on completion of the adjustment check that the length of the two track rods is equal, when the lengths are unequal the Ackerman angles can be incorrect, thus any unequal length must be eliminated, see under "Track rods, To remove and refit—Steering Gear, Section J".
3. Tighten the four ball joint locknuts ensuring that the tapered ball pins are centrally disposed within their sockets.

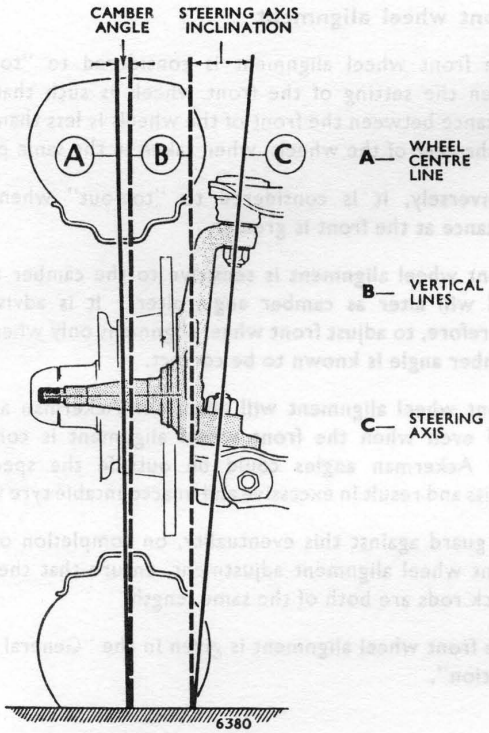

Fig. 6

Camber and steering axle inclination angles, the addition of these two angles form the "Included angle"

Castor angle

Castor angle is the angle of inclination of the stub axle carrier axis from the vertical when viewed from the side. Rearward inclination at the top of the axis is termed "positive" while forward inclination is termed "negative".

The angle is built into the front suspension and cannot be adjusted but must be checked after accident damage has been repaired and when directional instability is experienced to ensure the angle is within the specified limits. A calculated castor angle is given in the "General Data Section".

Any inaccuracies discovered can be attributed to a damaged crossmember, top or bottom link.

To check

1. The car will have already been prepared for the camber angle and front wheel alignment checks.
2. Apply a suitable castor angle checking gauge to the front wheel and check the castor angle, exercising care to follow the gauge manufacturer's instructions and avoiding any front wheel "run-out". Note the gauge reading.
3. Effect the same procedure with the opposite front wheel and note the gauge reading.
4. When the castor angles are incorrect, the front suspension must be dismantled and each detail examined for wear and accident damage.

Steering axis inclination angle

The steering axis inclination angle is the angle at which the steering axis is inclined inwards from the vertical when viewed from the front of the car.

The angle is built into the front suspension and cannot be adjusted, and it will remain correct providing the camber angle is correct. The relationship between the steering axis inclination and camber angle is such that the latter will alter as the steering axis inclination angle alters.

The steering axis inclination angle is given in the "General Data Section".

To check

1. The car will have already been prepared for the camber angle, front wheel alignment and castor angle checks.
2. Apply a suitable steering axis inclination angle checking gauge to the front wheel and check the steering axis inclination angle, exercising care to follow the gauge manufacturer's instructions and avoiding any front wheel "run-out". Note the gauge reading.
3. Effect the same procedure with the opposite front wheel and note the gauge reading.
4. When the steering axis inclination angles are incorrect and the camber angle is known to be within the specified limits, the front suspension must be dismantled for each detail examined for wear and accidental damage.

Included angle

The included angle is the addition of the camber and steering axis inclination angles and can be utilised to determine whether adjustment of the camber angle will correct any inaccuracies in the front suspension angles or whether the front suspension must be dismantled and the components examined for wear and damage.

When the addition of the camber and steering axis inclination angles, determined by the checking gauges, is identical to the addition of the true angles given in the "General Data Section", it indicates that the camber angle can be corrected.

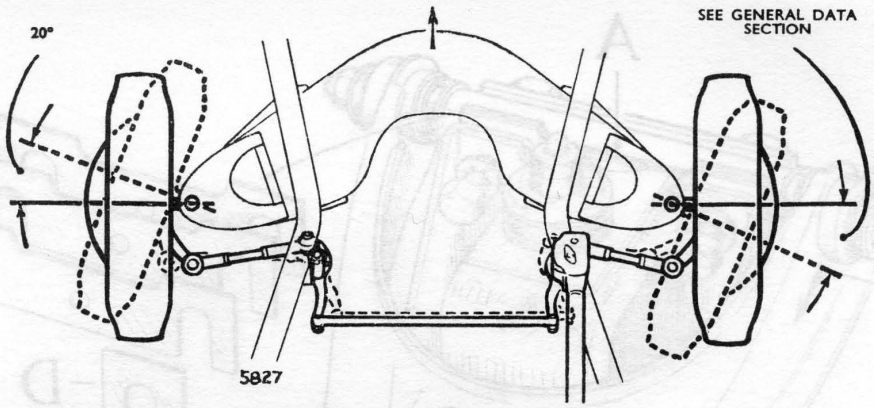

Fig. 7. *Ackerman angles showing front wheel "toe-out" in turns*

Conversely, when the addition of the two angles determined by the checking gauges differs from the addition of the true angles, it indicates that no useful purpose will be served by adjusting the camber angle as the steering axis inclination angle will always be incorrect.

Any inaccuracies discovered can be attributed to a damaged stub axle carrier.

Ackerman angles

The Ackerman angles, by producing a front wheel "toe-out" while cornering, permit the front wheels of the car to follow their respective arcs and provide a rolling action for both front wheels instead of a "scruffing" action.

The Ackerman angles are determined by the angular setting of the steering arms and the length of the two track rods, thus any inaccuracy can be attributed to damaged steering arm(s) or track rods of unequal length.

The Ackerman angles are given in the "General Data Section".

To check

1. Prepare the car, check the camber angle and the front wheel alignment, see under their respective headings.
2. Move the car forward onto the turntable gauges and rear wheel ramps; when the front wheels are in the straight ahead attitude, set both turntables gauges to "zero".
3. Turn the steering to the right until the left-hand turntable gauge reads 20°, note the gauge reading of the right-hand turntable.
4. Turn the steering to the left until the right-hand turntable gauge reads 20°, note the gauge reading of the left-hand turntable.
5. When the Ackerman angles are found to be incorrect it suggests that the length of the track rods are unequal or one of both steering arms are bent.

To adjust

1. Slacken off the four ball joint locknuts and detach the ball joints from the steering arms by discarding the split pins, removing the castellated nuts and withdrawing the tapered ball pins using a suitable extractor, Churchill tool No. RG.190.
2. Centralise the steering unit by counting the number of steering wheel turns from lock to lock and then turning the steering wheel back half this amount, from the full lock position. *The steering unit must remain in this position throughout the following operations.*

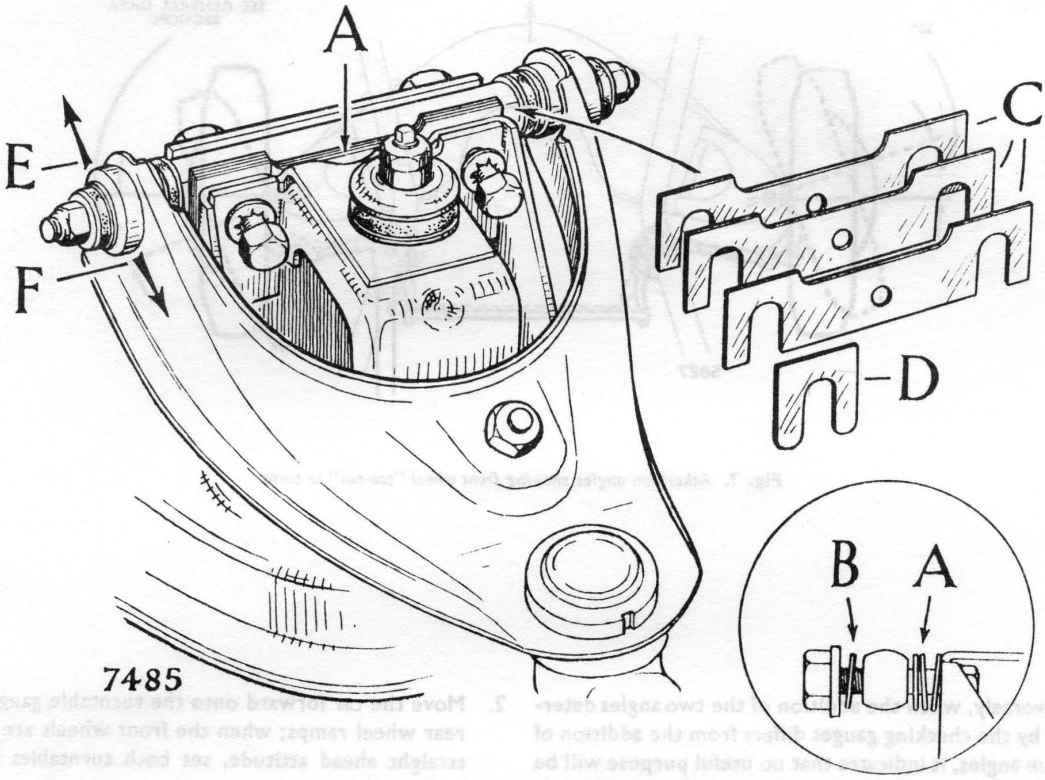

Fig. 8. *Top link showing shim locations*

A POSITION OF CAMBER SHIMS—OUTER
B POSITION OF CAMBER SHIMS—INNER
C CAMBER ADJUSTER SHIMS
D ALIGNMENT SHIMS
E TO DECREASE CAMBER ANGLE
F TO INCREASE CAMBER ANGLE

3. Set both front wheels in the straight ahead attitude by positioning them parallel to the rear wheels and measure the two distances between the centre of each tyre tread and the front centre hole of each bottom link fulcrum pin; *ensure that these distances are equal*, any front wheel misalignment that may be introduced here will be eliminated in a subsequent operation.

4. Adjust the length of both track rods so the two tapered ball pins will freely enter the two steering arms and fit the castellated nuts, do not disturb the position of the front wheels or steering unit.

5. Check and adjust the front wheel alignment only, see under "Front wheel alignment—To check and adjust".

6. Recheck the Ackerman angles as previously described and when they are still found to be incorrect it suggests that one or both steering arms are bent.

7. Fully tighten both ball joint nuts, the castellated nuts and fit new split pins.

8. As the steering wheel may become misaligned, check the horizontal position of the spokes and reset as necessary, see under "Steering wheel—To remove and refit—Steering Gear, Section J".

SHIMS

The shims used in the front suspension assembly are of the two types:—

1. Camber adjustment shims.

   The camber adjustment shims are positioned between the top fulcrum pin and the crossmember, by adding or subtracting the shims, the camber angle can be decreased or increased respectively.

   The shims are available in two thicknesses:—

   (i) ·104 in. (2·6 mm.) equals 30′ } variation in
   (ii) ·064 in. (1·6 mm.) equals 20′ } camber angle

2. Short alignment shims.

   These shims are positioned at either end of the camber adjustment shims only when the need arises to align the two swivel bearings in the outer ends of the links. They must be refitted to their original positions should they ever be removed.

WHEEL LOCK ANGLES

The wheel lock angles are set by a lug cast in the bottom of each stub axle carrier contacting a lever welded onto the top face of each bottom link. The wheel lock angles cannot be adjusted but can be made unequal when the length of the two track rods is unequal.

REMOVING AND REFITTING FRONT SUSPENSION

1. Ensure that the heater temperature control is in the "hot" position or red sector and drain the engine cooling system, salvaging any coolant when it is known to contain an anti-freeze or inhibitor additive; disconnect the top and bottom hoses from the radiator by releasing the hose clips, thus permitting some movement of the engine when it is detached from the crossmember.

2. Apply the handbrake and jack up the front of the car, position two stands one beneath each underframe sidemember, lower the car onto the stands and remove the jack.

3. Remove the two front wheels, detach the two track rods ball joints from the steering arms by discarding the split pins, removing the castellated nuts and withdrawing the tapered ball pins using a suitable extractor, Churchill tool No. RG.190.

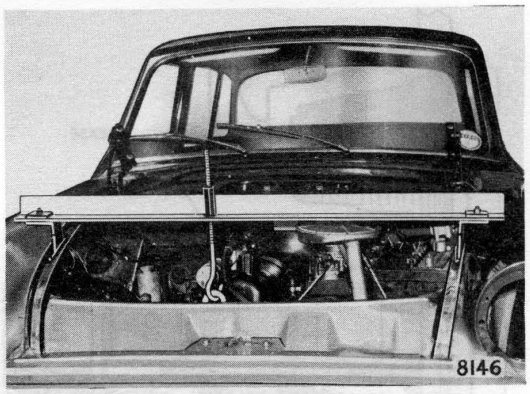

Fig. 9

Showing the special tool, RG.720, in position supporting the engine while the front suspension assembly has been removed, the bonnet has been removed for clarity

4. Disconnect the two front brake pressure pipes by releasing the union nuts and trapping any escaping brake fluid in a drip tray; the right-hand pressure pipe from the flexible hose in the support bracket on the crossmember and the left-hand pressure pipe from the five-way connector inside the engine compartment, the latter pipe is clipped to the rear edge of the crossmember and will be removed with it.

5. Support the engine with the Churchill tool RG.720, see Fig. 9 and detach the front engine mountings from the crossmember by withdrawing two bolts and washers, identify the tappings from which they were removed.

6. Support the crossmember with a trolley jack and wooden beam, withdraw the four crossmember to underframe sidemember bolts; access to these bolts is gained through the holes in the underside of the crossmember.

7. Refitting is the reverse of the removal sequence, but particular attention must be given to the following:—

   (i) When fitting a replacement crossmember cut off the engine tie rod bracket from the rear edge of the crossmember adjacent to the rear end of the right-hand bottom fulcrum pin, the flexible hose support bracket must not be confused with the tie-rod bracket; paint the bare metal.

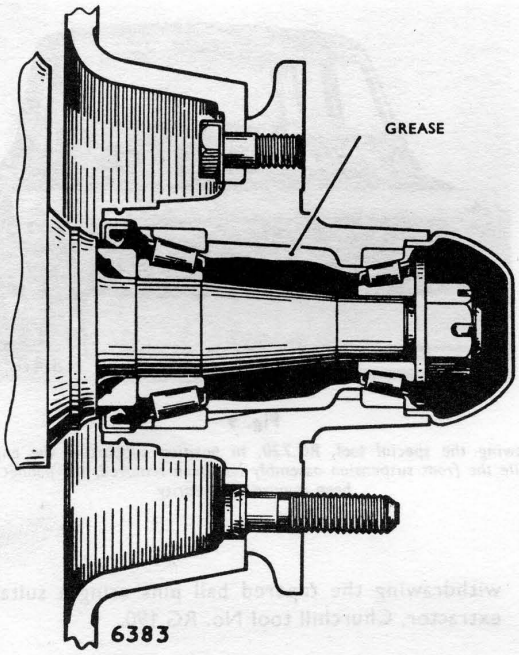

Fig. 10. *Sectional view showing grease level*

(ii) The absence or presence of the castor control wedges on the centre top face of the crossmember is apparent, see under "Castor control wedges".

(iii) Tighten the four crossmember to underframe sidemember bolts progressively to the torque given in the "General Data Section".

(iv) Refit the engine to the crossmember using the two sets of tappings as follows:—

Front tappings of each pair—Minx, Gazelle and Rapier.

Rear tappings of each pair—Super Minx, Vogue and Sceptre.

(v) The brake hydraulic system is bled of air, see under "Bleeding the hydraulic system of air—Brake Section K".

(vi) Refill the engine cooling system and top up with fluid containing the additives as necessary. As the cooling system is pressurised, leaks may not become apparent until after the engine has reached its full working temperature.

CASTOR CONTROL WEDGES

To obtain the necessary castor angle, castor control wedges are, in certain instances, fitted between the centre top face of the crossmember and are only removed when it is necessary to transfer them to a replacement crossmember.

Two types of castor control wedges are used and can be identified to certain cars as follows:—

(i) Longer, fitted thick end to the front of the crossmember on Minx, Gazelle and Rapier cars. The word "*front*" is cast into the thick end of its fitting face.

(ii) Shorter, fitted thick end to the rear of the crossmember on Alpine cars. The word "*rear*" is cast into the thick end of its fitting face.

In no circumstances whatsoever must these castor control wedges be fitted in any other manner.

DISMANTLING AND ASSEMBLING SUSPENSION

(Complete assembly attached to chassis)

To facilitate the servicing of a single component, the dismantling and reassembling of each item is fully described under the appropriate heading. The dismantling and assembling sequences applies when servicing both sides of the suspension.

FRONT HUB AND BEARINGS

To remove and dismantle

1. Apply the handbrake, jack up the front of the car and remove the front wheel.
2. Remove the brake caliper from the rear face of the stub axle carrier, see under "Brake caliper—To remove and refit—Brakes Section K" and suspend nearby without straining the flexible hose.
3. Prise off the hub cap, discard the split pin, remove the castellated nut and plain washer.
4. Withdraw the hub by hand as an assembly complete with inner and outer bearings and grease seal, holding one hand under the outer end of the hub to trap the outer roller assembly.
5. The larger inner roller assembly can be removed after extracting the grease seal; when new bearings are to be fitted, the outer races of the worn bearings must be removed by ejecting them with a suitable drift.
6. The special distance piece for the wiping edge of the grease seal can now be removed from the stub axle carrier when not already withdrawn with the hub assembly.

To reassemble and refit

1. Check the security of the wheel studs which are a press fit in the hub flange; any wheel stud that is slack must be renewed but when the renewals are no tighter, a new hub must be obtained.
2. When new bearings are necessary press the outer races squarely into their respective ends of the hub, ensuring that the large internal diameters are outwards.
3. Pack the hub and roller assemblies with grease of the correct grade, see under "Recommended Lubricants—Section P". The amount required is one and a half hub capfuls, distributed evenly within the hub between the outer races. *Do not pack the hub cap with grease.*
4. Rest the hub on a clean surface with its inner end upwards and insert the larger inner roller assembly followed by a new grease seal lightly greased and with wiping edge towards the bearings; press into position flush with the end of the hub.
5. Press the special distance piece, bevelled edge upward, into the centre of the grease seal by hand.
6. The smaller roller assembly can now be fitted to the outer end of the hub.
7. Fit the complete hub assembly to the stub axle, holding it in position whilst fitting the washer and the castellated nut.
8. Adjust the end float, see under "To adjust end float", lock the castellated nut with a new split pin and fit the hub cap. *Do not fill the hub cap with grease.*
9. Fit the brake caliper to the rear face of the stub axle carrier, see under "Brake caliper—To remove and refit—Section K". Fit the front wheel and remove the jack.

To adjust end float

It is essential that the end float of the front hub bearings is correct, otherwise the front brake pads will be "knocked back" resulting in reduced brake efficiency.

To obtain the proper conditions the following procedure must be observed.

1. Jack up the front of the car until the front wheel is clear of the ground, remove the nave plate and prise off the hub cap.
2. Discard the split pin, apply a suitable torque wrench to the castellated nut until a torque reading of 15—20 lbs. ft. (2·07—2·76 kg.m.) is obtained, spinning the front wheel simultaneously.

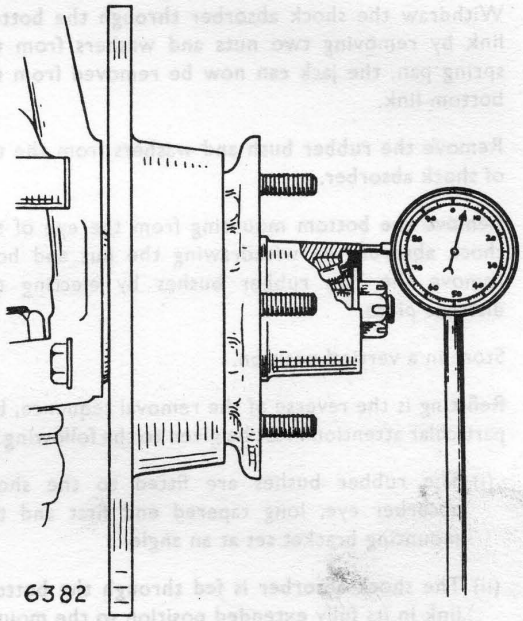

Fig. 11. *Application of dial test indicator to check front hub end float*

3. Release the nut one to one and a half flats, spin the front wheel and check the end float by using a dial gauge.
4. When the end float is not within the figures given in the "General Data Section", the castellated nut must be further adjusted and the end float again checked with the dial gauge.
5. When the correct end float is obtained, lock the castellated nut with a new split pin and fit the hub cap. *Do not fill the hub cap with grease.* Fit the nave plate and remove the jack.

FRONT SHOCK ABSORBER

The shock absorbers are sealed units, requiring no maintenance other than checking the mountings and rubber bushes.

To remove and refit

1. Apply the handbrake, jack up the front of the car, remove the front wheel and jack up the bottom link to bring it to the horizontal position.
2. Detach the shock absorber at the top end by removing the two nuts, washers and rubber bush from above the crossmember.

3. Withdraw the shock absorber through the bottom link by removing two nuts and washers from the spring pan, the jack can now be removed from the bottom link.

4. Remove the rubber bush and washers from the top of shock absorber.

5. Remove the bottom mounting from the eye of the shock absorber by withdrawing the nut and bolt; remove the two rubber bushes by ejecting the distance piece.

6. Store in a vertical position.

7. Refitting is the reverse of the removal sequence, but particular attention must be given to the following:—

   (i) The rubber bushes are fitted to the shock absorber eye, long tapered end first and the mounting bracket set at an angle.

   (ii) The shock absorber is fed through the bottom link in its fully extended position so the mounting bracket is inclined downward and outward.

   (iii) The first top nut is tightened until it bottoms and the second nut, locks the first.

Testing by hand

When there is any question of the front suspension not being adequately damped, other factors together with the shock absorbers should be considered. These are:— road springs, tyre pressures, bump rubbers and bump rubber seats.

When a shock absorber does not appear to function satisfactorily, an indication of its condition can be obtained by carrying out the following check:—

1. Remove the shock absorber from the car, see under "Shock absorber—To remove and refit"; position the shock absorber vertically in a vice by gripping the eye between two pieces of wood.

2. Grip the upper end of the piston rod firmly with the hands and operate the shock absorber by moving the rod up and down.

   The presence of air is usually indicated by a lack of resistance or a springy "feel" at the beginning of each stroke. If this is suspected, the shock absorber should be left in a vertical position for a few minutes to allow bubbles of air to collect at the top of the pressure chamber.

3. With the shock absorber still vertical, a few short strokes from the fully compressed position followed by a few slow full strokes should remove all air from the pressure chamber.

   Moderate and even resistance throughout the upward and downward strokes should be felt after expelling the air. If, however, the resistance is slight or erratic and free movement cannot be eliminated then the shock absorber should be renewed.

   It is difficult to form an adequate opinion of the true operational condition of a shock absorber by hand testing. The slow hand speed only partially operates the "bleed" setting within the shock absorber and a large part of the road spring control depends on the high pressure or high speed setting which can only operate while the shock absorber is in service. A new shock absorber may appear to be weak when operated by hand, but this should not always be taken as evidence of a fault.

STABILISER BAR

To remove and refit

1. Do not remove the weight of the car off the front wheels.

2. Remove the stabiliser bar from the front edges of the two bottom links by removing four bolts, nuts, washers, retaining clips and two distance pieces.

3. Remove the four rubber bushes from the stabiliser bar when they are seen to be well worn.

4. Refitting is the reverse of the removal sequence but particular attention must be given to the following:—

   (i) Align the four rubber bushes symmetrically on the stabiliser bar with the four slots in the two bottom links.

   (ii) Compress each of the four retaining clips and rubber bushes with a "G" clamp to insert the bolts.

   (iii) Fit the two distance pieces, one between each outer retaining clip and the underside of the bottom link.

STUB AXLE CARRIER

To remove and refit

1. Apply the handbrake, jack up the front of the car and remove the front wheel.

2. Remove the brake caliper from the rear face of the stub axle carrier, see under "Brake caliper—To remove and refit—Brakes Section K" and suspend nearby without straining the flexible hose, remove the front hub and bearings, see under "Front hub and bearings", remove the brake disc splash guard from the stub axle carrier by withdrawing three bolts and washers.

3. Detach the steering arm from the axle carrier by withdrawing the front bolt and washer.

4. Remove the shock absorber, see under "Shock absorber—To remove and refit".

5. Fit the spring compressor RG.50D in place of the shock absorber and compress the spring until the bottom link is in a horizontal position. The use of a jack as a substitute for the spring compressor RG.50D is a dangerous alternative.

6. Remove the stub axle carrier from the top and bottom swivel bearings by discarding the split pin of the bottom swivel bearing, removing two nuts and withdrawing the tapered ball pins using a suitable extractor, Churchill tool No. RG.191.

7. Refitting is the reverse of the removal sequence, but particular attention must be given to the following:—

   (i) The rear steering arm bolt also attaches the top lug of the brake caliper.

   (ii) The swivel bearing nuts are tightened to the torque specified in "General Data" and a new split pin fitted to the bottom swivel bearing.

   (iii) When a new stub axle carrier has been fitted a full front suspension angle and steering alignment check must be made.

FRONT ROAD SPRING

To remove and refit

1. Apply the handbrake, jack up the front of the car, remove the front wheel and shock absorber, see under "Shock absorber—To remove and refit".

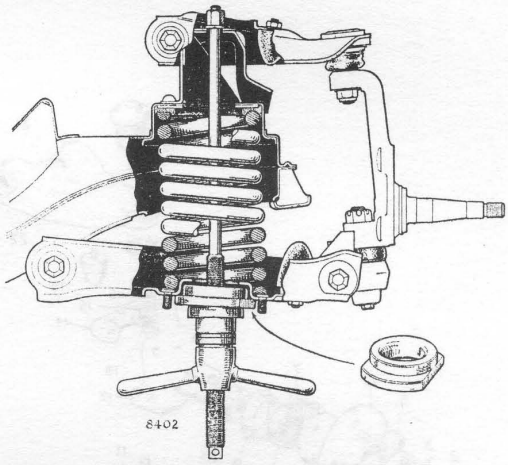

Fig. 12

Front suspension unit in static laden condition with spring compressor RG.50D replacing the shock absorber

2. Fit the spring compressor RG.50D in place of the shock absorber and compress the spring until the bottom link is in the horizontal position. The use of a jack as a substitute for the spring compressor RG.50D is a dangerous alternative.

3. Detach the bottom swivel bearing from the stub axle carrier by discarding the split pin, removing the castellated nut and withdrawing the tapered ball pin using a suitable extractor, Churchill tool No. RG.191.

4. Support the top link and front hub assembly by positioning a small block of wood between the rebound rubber and the crossmember.

5. Detach the bottom link from the crossmember by withdrawing two bolts and washers from each fulcrum pin clamp.

6. Release the spring compressor gradually until the road spring is fully extended, remove the spring compressor, bottom link, spring and insulator.

7. Refitting is the reverse of the removal sequence, but particular attention must be given to the following:—

   (i) The four grooves in the sides of the fulcrum pin accommodate the shanks of the four fulcrum pin attachment bolts.

   (ii) The nut of the swivel bearing and four fulcrum pin bolts are tightened to the torque given in "General Data" and a new split pin is fitted.

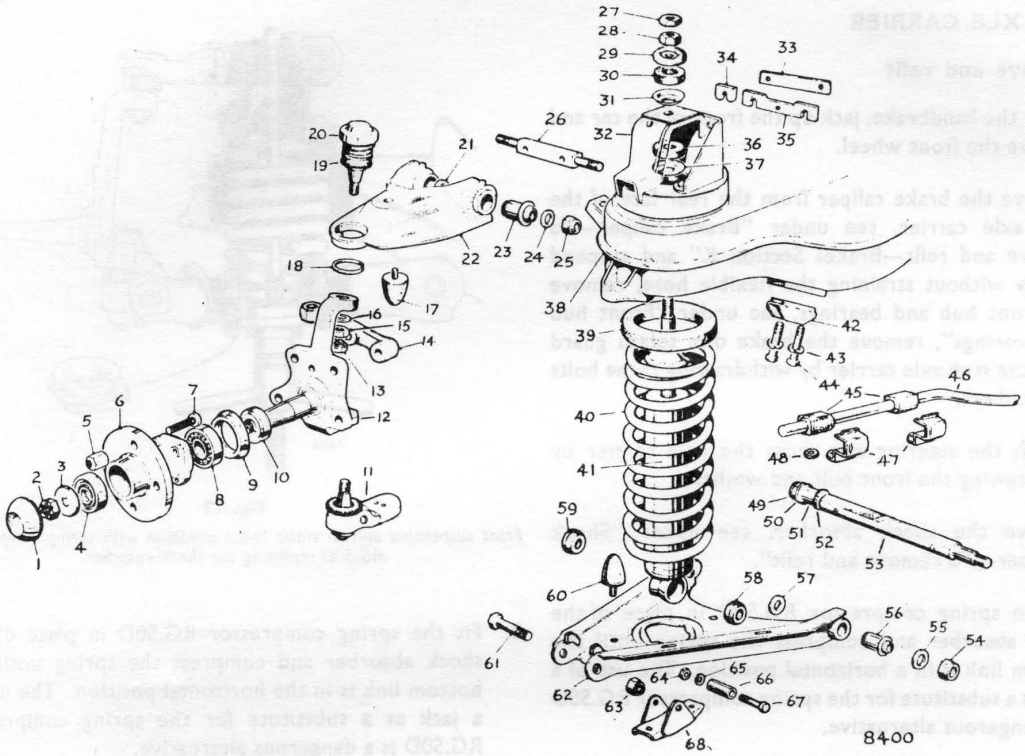

1. HUB CAP	18. CIRCLIP	35. CAMBER SHIM	52. SPECIAL WASHER
2. CASTELLATED NUT	19. DUST COVER	36. RUBBER BUSH	53. BOTTOM FULCRUM PIN
3. WASHER	20. TOP SWIVEL BEARING	37. CUP WASHER	54. FULCRUM PIN NUT
4. SMALL ROLLER RACE	21. SPECIAL WASHER	38. CROSSMEMBER	55. WASHER
5. WHEEL NUT	22. TOP LINK	39. INSULATOR	56. RUBBER BUSH
6. HUB	23. RUBBER BUSH	40. SPRING	57. SPECIAL WASHER
7. WHEEL STUD	24. WASHER	41. SHOCK ABSORBER	58. RUBBER BUSH
8. LARGE ROLLER RACE	25. FULCRUM PIN NUT	42. CLAMP	59. RUBBER BUSH
9. GREASE SEAL	26. TOP FULCRUM PIN	43. SPRING WASHER	60. BUMP RUBBER
10. DISTANCE PIECE	27. LOCKNUT	44. BOLT	61. BOLT
11. BOTTOM SWIVEL BEARING	28. TOP NUT	45. RUBBER BUSHES	62. BOTTOM LINK
12. STUB AXLE CARRIER	29. CUP WASHER	46. STABILISER BAR	63. NUT
13. CASTELLATED NUT	30. RUBBER BUSH	47. CLAMPS	64. NUT
14. STEERING ARM	31. CUP WASHER	48. DISTANCE PIECE	65. SPRING WASHER
15. NUT	32. SPRING TURRET	49. FULCRUM PIN NUT	66. DISTANCE PIECE
16. WASHER	33. ATTACHMENT PLATE	50. WASHER	67. BOLT
17. REBOUND RUBBER	34. ALIGNMENT SHIM	51. RUBBER BUSH	68. MOUNTING BRACKET

Fig. 13. *Exploded view of suspension unit*

Insulators

Insulators, fabricated from hard rubber, are fitted between the top of each spring and the inside of the crossmember. They were introduced at the following chassis numbers:

Minx VI	006002601	Gazelle VI	706000781
Super Minx IV	034002466	Vogue IV	774000747
Rapier V	325000114	Alpine V	395000781
Sceptre II	132000235		

BOTTOM LINK

To remove and refit

The bottom link is removed and refitted in a similar manner to that described under "Front road spring—To remove and refit". When a replacement bottom link is being fitted, the two nuts on the ends of the fulcrum pin must only be tightened when the weight of the car is on the road wheels, see under "Fulcrum pin nuts" and a full front suspension and steering alignment check must be made.

TOP LINK

To remove and refit

1. Apply the handbrake, jack up the front of the car remove the front wheel and shock absorber, see under "Shock absorber—To remove and refit".

2. Fit the spring compressor RG.50D in place of the shock absorber and compress the spring until the bottom link is in the horizontal position. The use of a jack as a substitute for the spring compressor RG.50D is a dangerous alternative.

3. Detach the top swivel bearing from the stub axle carrier by removing the nut and withdrawing the tapered ball pin using a suitable extractor, Churchill tool No. RG.191.

4. Support the stub axle and hub assembly so the flexible hose of the front brake is under no strain.

5. Remove the top link and camber adjustment shims, identifying the position of any short alignment shims, by withdrawing two bolts and washers from the attachment plate.

6. Refitting is the reverse of the removal sequence but particular attention must be given to the following:—

   (i) Ensure that all shims are returned to their original positions.

   (ii) The nut on the swivel bearing and the two fulcrum pin bolts are tightened to the torque given in the "General Data Section".

   (iii) When a replacement top link is being fitted, the two nuts on the ends of the fulcrum pin must only be tightened when the weight of the car is on the road wheels, see under "Fulcrum pin nuts", and a full front suspension and steering check must be made.

DICTIONARY OF TERMS

Top link	=	Upper control arm
Bottom link	=	Lower control arm
Stub axle carrier	=	Steering knuckle
Track rod	=	Tie rod
Fulcrum pin	=	Control arm pivot shaft
Steering wheel	=	Handwheel

SERVICE OPERATIONS

In the following paragraphs service operations covering the front suspension are described in detail.

The special tools necessary in carrying out each operation are listed under the appropriate operational heading.

The removal and refitting of the various components requiring servicing has been dealt with under their respective headings earlier in this Section.

SERVICING FRONT HUBS

The servicing of the front hubs has been described under "Dismantling and assembling suspension", the sequence covers the removing and refitting of the hubs, the fitting of new bearings and end float adjustment.

CHECKING FRONT ROAD SPRINGS

The free lengths and diameters of the front road springs are given in the "General Data Section".

While it is possible to check the front spring heights by taking the height of the car and comparing it with one known to be in excellent condition, the possibility of incorrect spring(s) or packing piece(s) that may be fitted, particularly to unknown second-hand cars, makes the method of checking very unreliable.

ACCIDENTAL DAMAGE

When serious accident damage has occurred to the front suspension, not only must it be removed from the car for examination, the underframe alignment must also be checked; see illustration "Principal underframe dimension—Body Section O".

All damaged and suspected parts must be removed from the crossmember, cleaned and measurements cross checked on a surface table with new parts.

Parts found to be damaged must be discarded and renewed, no attempt must be made to salvage damaged parts by heating and resetting.

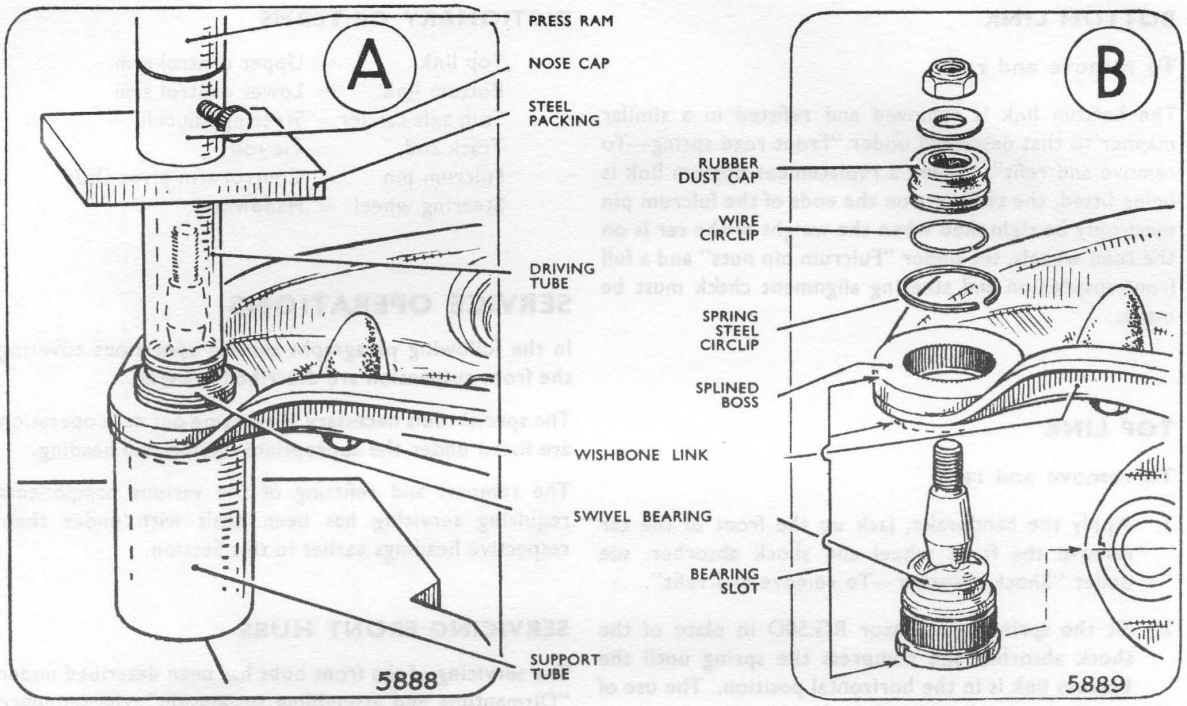

Fig. 14. "A", pressing out top swivel bearing using special tool, RG.319 and "B", showing correct position of alignment slot when refitting

TOP SWIVEL BEARING

To remove and refit

The top swivel bearing cannot be removed and refitted without first removing the top link from the stub axle and crossmember. The head of the swivel bearing body carries a slot which indicates the maximum angular travel of the tapered ball pin and this must always be positioned towards the outside of the link boss furthest from the fulcrum pin.

A workshop press is used in conjunction with the special tool RG.319 and consists of:—

(i) Drive tool

(ii) Support tool

(iii) Replacing tool

1. The top link and camber adjustment shims are removed from the crossmember, see under "Top link—To remove and refit"; support the stub axle and hub assembly so the flexible hose of the front brake is under no strain.
2. Remove the rubber dust cover and washer from the swivel bearing body and tapered pin respectively by releasing the circlip or endless spring.
3. Release the circlip from the swivel bearing body adjacent to the boss in the outer end of the top link.
4. Position the support tool on the press bed and mount the top link above so the tapered ball pin points upwards and the support tool locates the boss on the top face of the link around the swivel bearing body.
5. Position the driving tool over the tapered ball pin so it locates the swivel bearing body; check the vertical alignment of all components beneath the press ram, eject the swivel bearing by applying steady pressure and remove it from the press bed.

6. Refitting is the reverse of the removal sequence, but particular attention must be given to the following:—

   (i) The swivel bearing is fed through the top face of the top link, tapered ball pin first, so the slot in its head is towards the outer edge of the top link opposite to the fulcrum pin.

   (ii) The tapered ball pin is fed into the support tool so the latter locates the boss on the underside face of the link and position the replacing tool on the head of the swivel bearing; check the vertical alignment of all components beneath the press ram, press the swivel bearing into the link boss by applying steady pressure and remove from the press bed.

   (iii) Ensure that the circlip locates the groove in the swivel body adjacent to the boss in the underside of the top link.

   (iv) Locate the washer on the tapered ball pin followed by the rubber dust cover and secure with the wire circlip or endless spring.

BOTTOM SWIVEL BEARING

To remove and refit

1. Apply the handbrake, jack up the front of the car, remove the front wheel and shock absorber, see under "Shock absorber—To remove and refit".

2. Fit the spring compressor RG.50D in place of the shock absorber and compress the spring until the bottom link is in the horizontal position. The use of a jack as a substitute for the spring compressor RG.50D is a dangerous alternative.

3. Detach the bottom swivel bearing from the stub axle carrier by discarding the split pin, removing the castellated nut and withdrawing the tapered ball pin using a suitable extractor; support the top link and hub assembly by positioning a small block of wood between the rebound rubber and its abutment face.

4. Remove the bump rubber from the top face of the bottom link by detaching a nut and washer.

5. Withdraw the bottom swivel bearing from the outer end of the bottom link by removing the horizontal bolt, nut and washer.

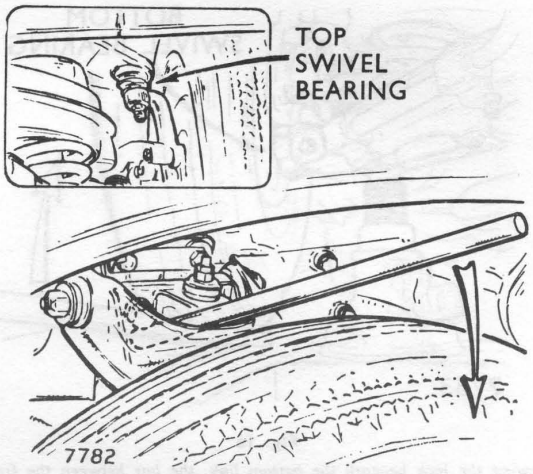

Fig. 15

Showing the bar over the top link and under the attachment bolt and the direction of leverage

6. Refitting is the reverse of the removal sequence, but particular attention must be given to the following:—

   (i) The horizontal bolt through the swivel bearing body is fully tightened after the bump rubber nut has been fully tightened to the torque given in the "General Data Section".

   (ii) The nut on the tapered ball pin of the swivel bearing is tightened to the torque given in the "General Data Section" and a new split pin fitted.

   (iii) A full front suspension and steering check is carried out.

Checking swivel bearings for wear

Top

1. Insert a bar into the top link from above the front wheel so the bar rests under the head of a fulcrum pin bolt and bears again the link pressing.

2. Lever downwards; when any free movement will indicate wear in the top swivel bearing which must be renewed.

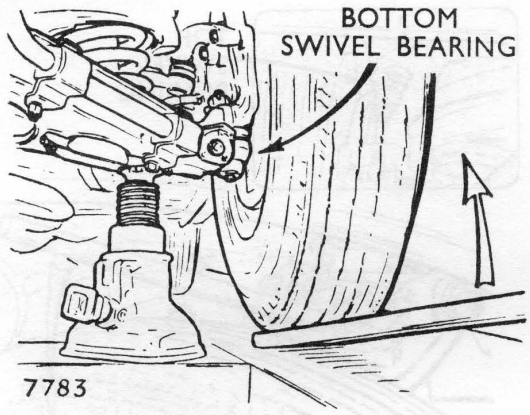

Fig. 16

Showing the jack beneath the bottom link, the bar between the front wheel and the ground

Bottom

1. Apply the front brakes by blocking the brake pedal in the down position, jack up the bottom link until the front wheel is clear of the ground and insert a bar between the ground and the tyre.

2. Lever upwards, when any free movement will indicate wear in the bottom swivel bearing which must be renewed.

LINK BUSHES

To renew the link bushes a workshop press is required to eject and fit the link bushes and no attempt must be made to remove or refit the link bushes without supporting the arms of the top or bottom links. A special tool, RG.318, is available for this purpose and consists of:—

(i) Plain support tool

(ii) Slotted support tool

(iii) Driving tool

(iv) Mushroom driver

Two of the tools are plain and one is slotted. The slot allows the fitting of the tool around the fulcrum pin when fitting the link bushes. The sequences are the same for both top and bottom links.

To renew

1. Remove the link from the crossmember as described under the appropriate heading; in the instance of the bottom link identify one end of the fulcrum pin to the link arm.

2. Remove the self-locking nuts and plain washers from both ends of the fulcrum pin.

3. Position the plain support tool on the press bed and mount the link above with the fulcrum pin vertical and with the plain support tool locating the outer face of the link arm boss around the link bush.

4. Position the mushroom driver between the press ram and the threaded end of the fulcrum pin, as illustrated at "A"; check the vertical alignment of all components, eject the link bush and fulcrum pin from the link arm by applying steady pressure and remove the link from the press bed.

5. Remove the link bush and special washer from the protruding end of the fulcrum pin, return the fulcrum pin and one special washer into the remaining link bush and invert the link.

6. Eject the remaining link bush from the opposite link arm as previously described in paragrah 3 onwards as illustrated at "B"; discard the used link bushes and special washers.

7. Using packing blocks to form a bridge below the press ram, set up the link so the slotted support tool locates the inner face of one link arm boss, the opposite link arm boss will be below the bridge of packing blocks and position the link bush squarely above; position the driving tool between the press ram and the link bush, as illustrated at "C", check the vertical alignment of all components, press the link bush into the link arm boss by applying steady pressure and remove the link from the press bed.

8. Fit the two special washers to the fulcrum pin, chamfered face first and when dealing with the bottom link instal the fulcrum pin into the bush and link according to the identification markings, i.e., so that the greater dimension between the special washer and the side grooves in the fulcrum pin is nearer the link arm without the elongated holes for the stabiliser clamps.

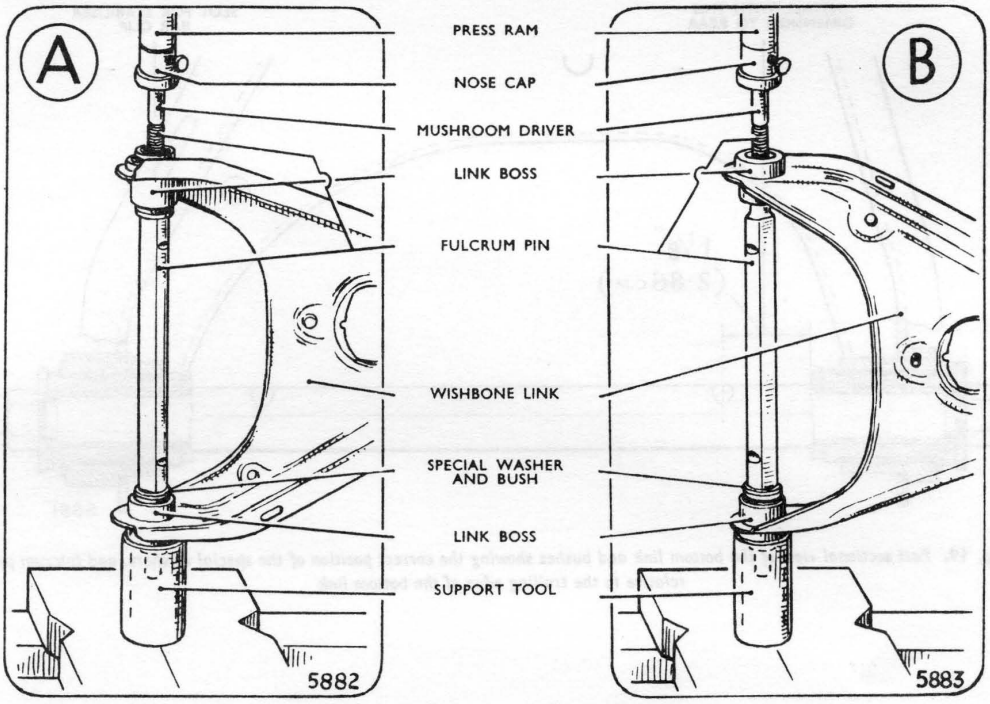

Fig. 17. *"A", pressing out one link bush; "B", pressing out the opposite link bush using a workshop press and special tool, RG.318*

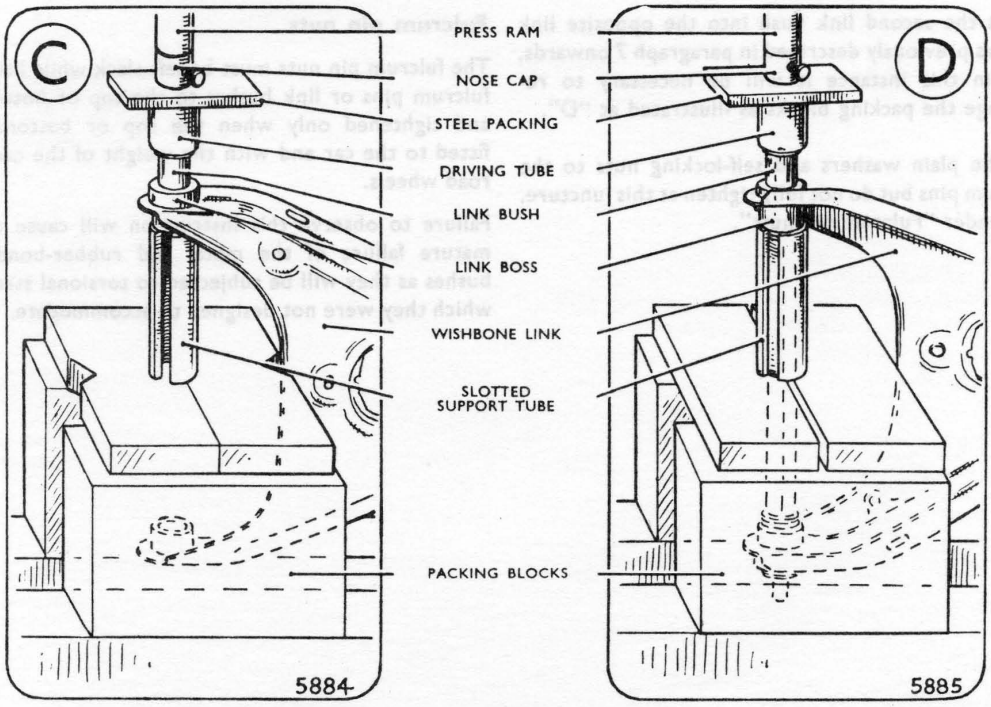

Fig. 18. *"C", pressing in one link bush, note the bridge of packing blocks to provide clearance for the opposite link arm; "D", pressing the link bush into the opposite link arm, note the position of the slotted support tube around the fulcrum pin*

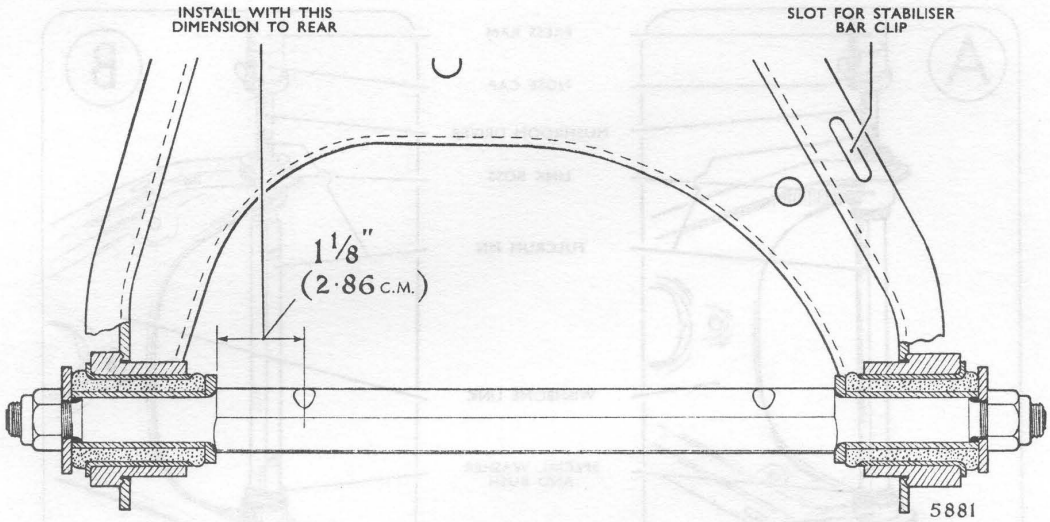

Fig. 19. *Part sectional view of the bottom link and bushes showing the correct position of the special washers, and fulcrum pin relative to the trailing edge of the bottom link*

9. Press the second link bush into the opposite link arm as previously described in paragraph 7 onwards, but in this instance it will be necessary to re-arrange the packing blocks as illustrated at "D".

10. Fit the plain washers and self-locking nuts to the fulcrum pins but do not fully tighten at this juncture, see under "Fulcrum pin nuts".

Fulcrum pin nuts

The fulcrum pin nuts must be left slack while fitting new fulcrum pins or link bushes to the top or bottom links and tightened only when the top or bottom link is fitted to the car and with the weight of the car on the road wheels.

Failure to observe this instruction will cause the premature failure of the metal and rubber-bonded link bushes as they will be subjected to torsional stresses for which they were not designed to accommodate.

GAP GAUGES

FRONT

A	ALPINE	2¾ in. (7·0 cm.)
	ALL OTHER CARS	3 in. (7·6 cm.)
B	ALPINE	2 in. (6·1 cm.)
	ALL OTHER CARS	2¼ in. (5·7 cm.)

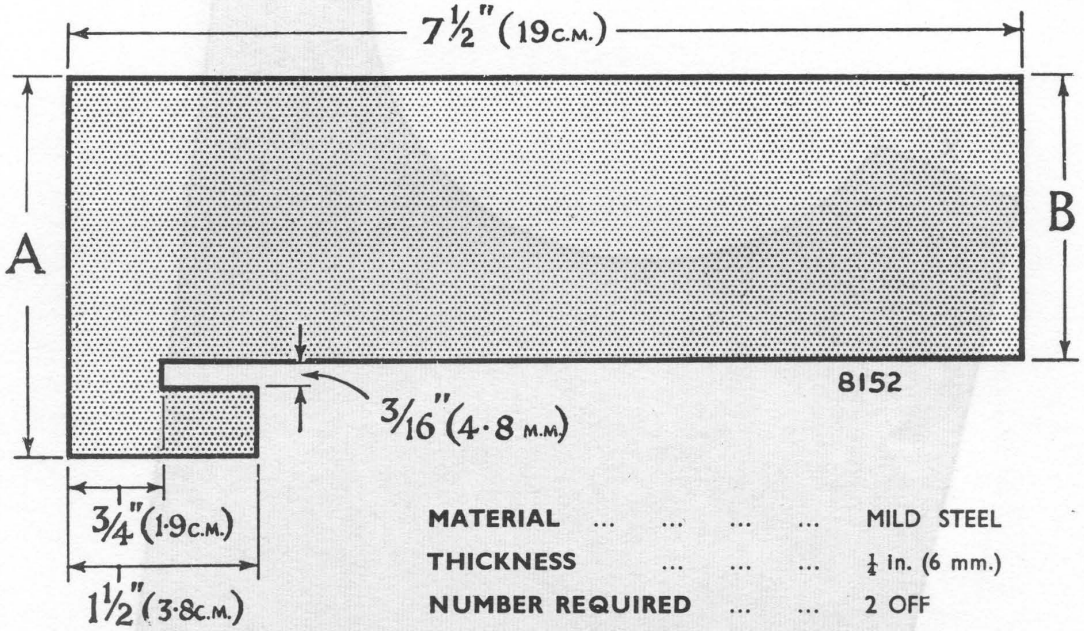

MATERIAL	MILD STEEL
THICKNESS	¼ in. (6 mm.)
NUMBER REQUIRED	2 OFF

Fig. 20. *Details of metal front gap gauges. Churchill tool No. RG.403 for Alpine cars, and RG.404 for all other cars*

REAR

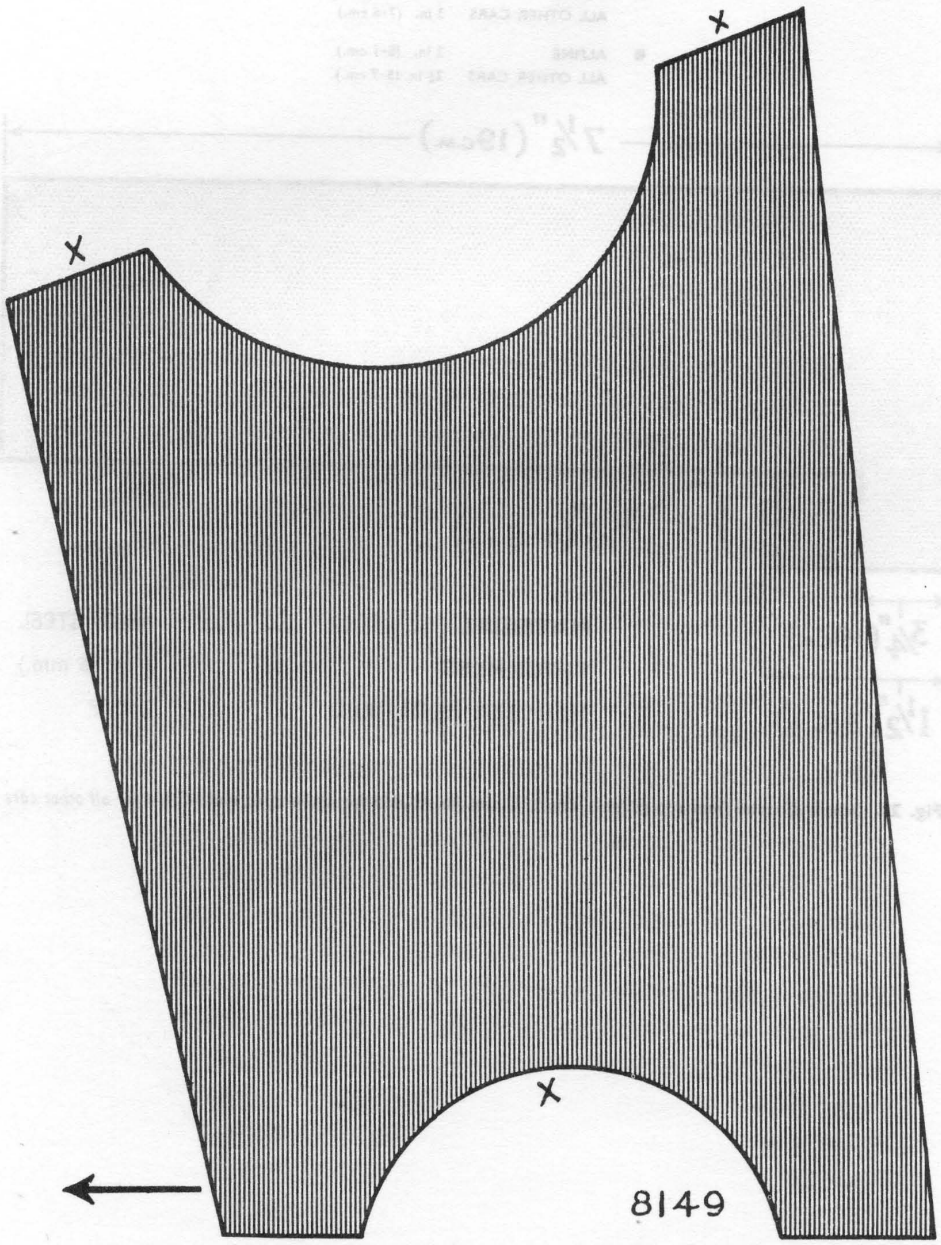

Fig. 21. *Wooden rear gap gauge for Minx, Gazelle and Rapier cars, fabricated from 1 in. (2·5 cm.) thick hardwood by glueing a carefully drawn tracing of this illustration to the wood and then cutting out with a suitable saw, the critical faces are marked with an "X"*

REAR

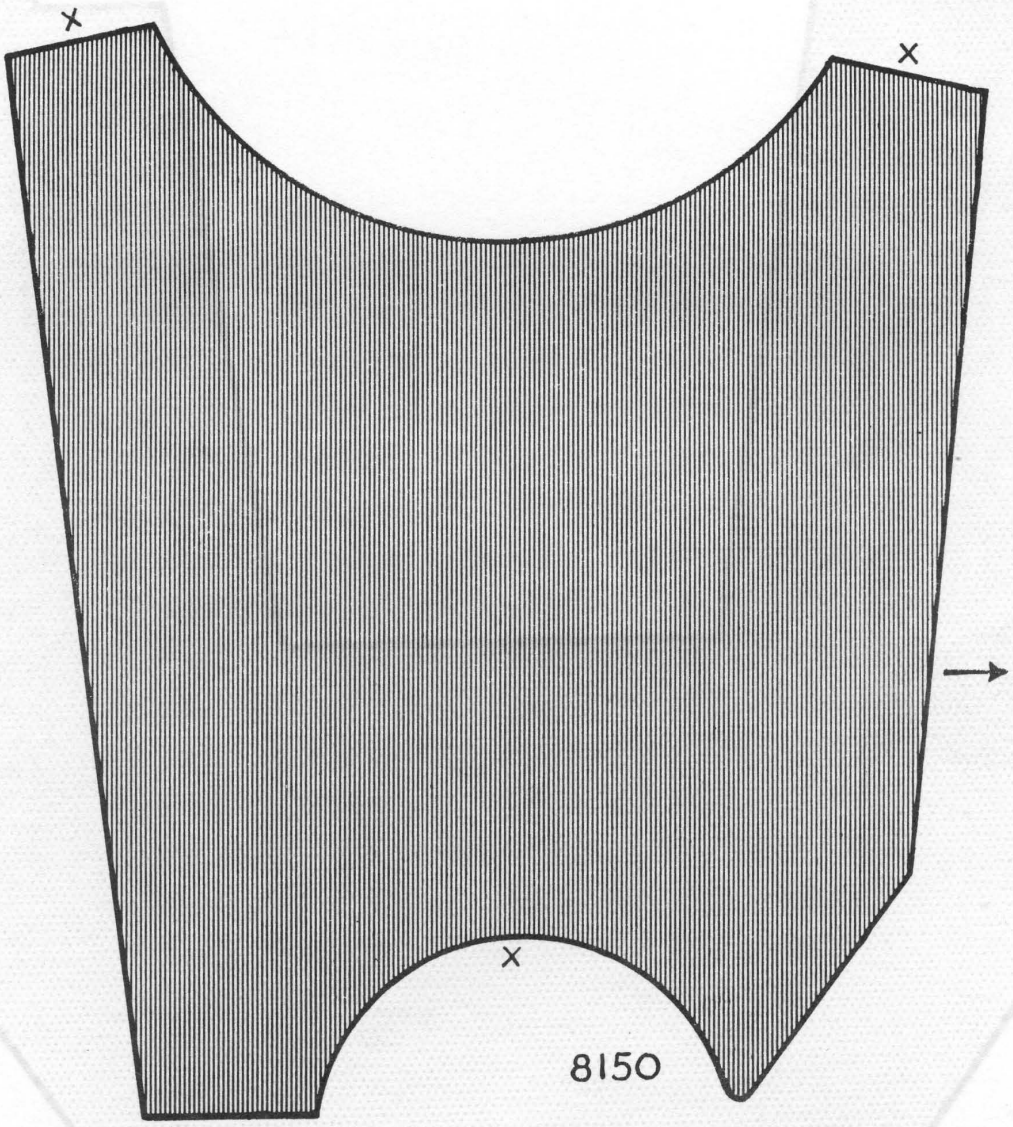

Fig. 22. *Wooden rear gap gauge for Alpine cars, fabricated from 1 in. (2·5 cm.) thick hardwood by glueing a carefully drawn tracing of this illustration to the wood and then cutting out with a suitable saw, the critical faces are marked with an "X"*

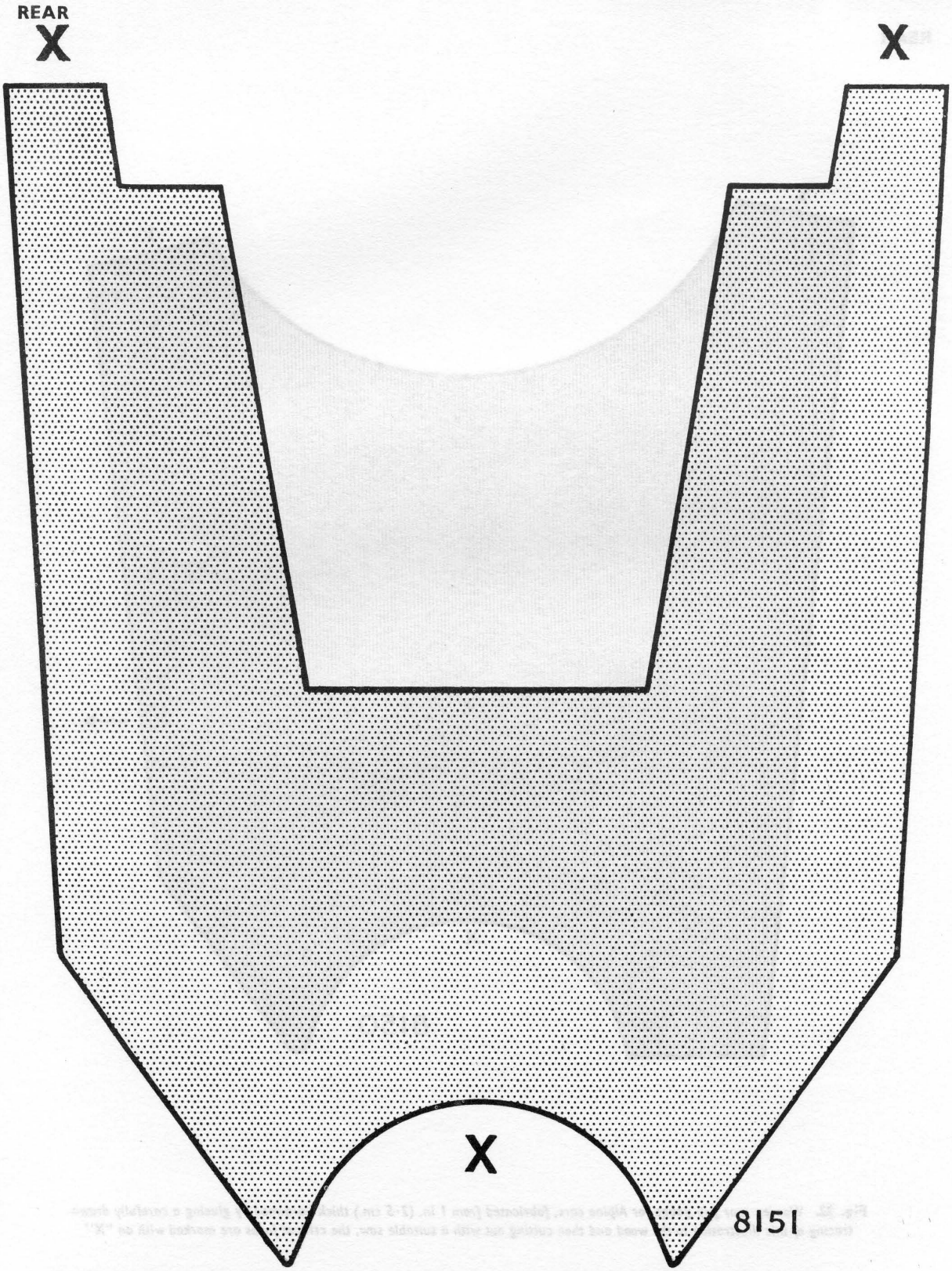

Fig. 23. *Wooden rear gap gauge for Super Minx, Vogue and Sceptre cars, fabricated from 1 in. (2·5 cm.) thick hardwood by glueing a carefully drawn tracing of this illustration to the wood and then cutting out with a suitable saw, the critical faces are marked with an "X"*