CARBURETTOR

TYPE — SOLEX B.32 P.A.I.A.S.

SOLEX P.A.I.A.S. CARBURETTOR

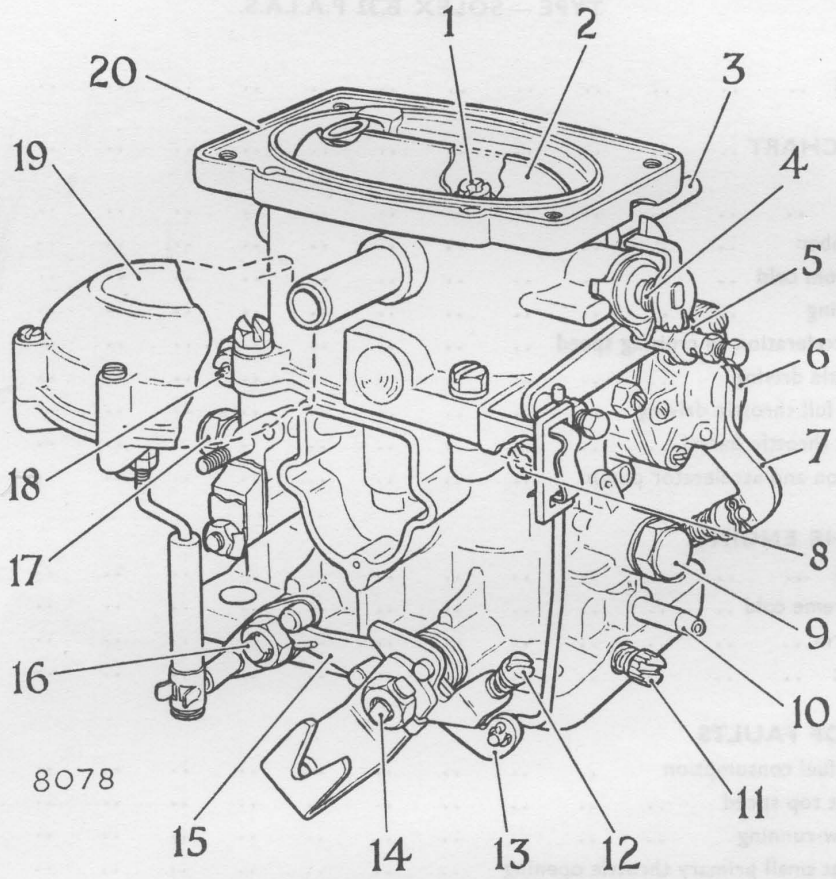

1. CARBURETTOR TOP BODY AND ACCELERATOR PUMP JET FIXING SCREW
2. CHOKE VALVE
3. FUEL INLET CONNECTION
4. CHOKE VALVE CLOSING SPRING
5. CHOKE VALVE CONTROL LEVER
6. ACCELERATOR PUMP
7. ACCELERATOR PUMP OPERATING LEVER
8. PRIMARY THROTTLE BARREL SLOW RUNNING JET
9. PRIMARY THROTTLE BARREL MAIN JET
10. VACUUM ADVANCE CONNECTION
11. SLOW RUNNING MIXTURE VOLUME CONTROL SCREW
12. SLOW RUNNING SPEED ADJUSTMENT
13. LEVER—OPERATED BY CHOKE CONTROL TO OPEN THROTTLE FOR STARTING
14. PRIMARY THROTTLE
15. OVERRIDING LEVER
16. SECONDARY THROTTLE
17. SECONDARY THROTTLE BARREL MAIN JET
18. SECONDARY THROTTLE BARREL PROGRESSION JET
19. SECONDARY THROTTLE OPERATING UNIT
20. CARBURETTOR TOP BODY AND FLOAT CHAMBER COVER

Fig. 1. *Solex B.32 P.A.I.A.S. carburettor — external view*

DESCRIPTION — See Fig. 1

The Solex B.32 P.A.I.A.S. carburettor is a twin choke downdraught carburettor. Its twin choke and twin throttle barrel arrangement overcome certain disadvantages met with on single choke carburettors when engine outputs are increased beyond moderate ratings.

With a single fixed choke carburettor the power output of an engine can be increased by using a larger choke tube with suitable jet settings, provided the engine valves, valve ports and manifolds do not obstruct the extra air that can pass through the larger choke tube.

SOLEX B.32 P.A.I.A. CARBURETTOR — PARTS IN OPERATION

ENGINE REQUIREMENT	PRIMARY THROTTLE BARREL						SECONDARY THROTTLE BARREL	
	Float Chamber	Choke Valve	Slow-running Jet	Progression Holes	Main Jet	Accelerator Pump	Progression Holes	Main Jet
Starting from cold	●	●	●	●	●			
Slow running	●		●					
Light throttle	●		★	★	●			
Acceleration	●				●	●		
Two thirds throttle Secondary throttle opening	●				●		●	
Two thirds throttle onwards	●				●			●
Acceleration	●				●	●		●
Deceleration on closed throttle	●		●					

● In operation.

★ Depending on how much throttle opening.

At the higher engine outputs, however, the choke tube size needed to obtain the required power is often too large to allow satisfactory tuning of the carburettor for proper part throttle performance.

This difficulty suggests that two carburettors are needed, one tuned to give economy and good part throttle performance when operating alone, and the other tuned so that when operating with the first primary carburettor, the maximum performance is obtained. The Solex B.32 P.A.I.A.S. carburettor does this by combining the advantages of two carburettors in one unit by having two throttle barrels fed from a single float chamber.

This carburettor is known as the Solex Automatic Twin. It has a single float chamber, manually operated choke valve, single accelerator pump and single slow-running system, together with twin choke tubes, twin by-pass (progression) circuits and twin main spraying circuits.

The slow-running circuit operates in the primary throttle barrel and is adjusted in a similar manner to that employed on a single barrel carburettor.

The primary throttle (14) of this carburettor is operated over its whole range of movement by the accelerator pedal. Its secondary throttle is operated automatically. The secondary throttle operating unit (19) consists of a

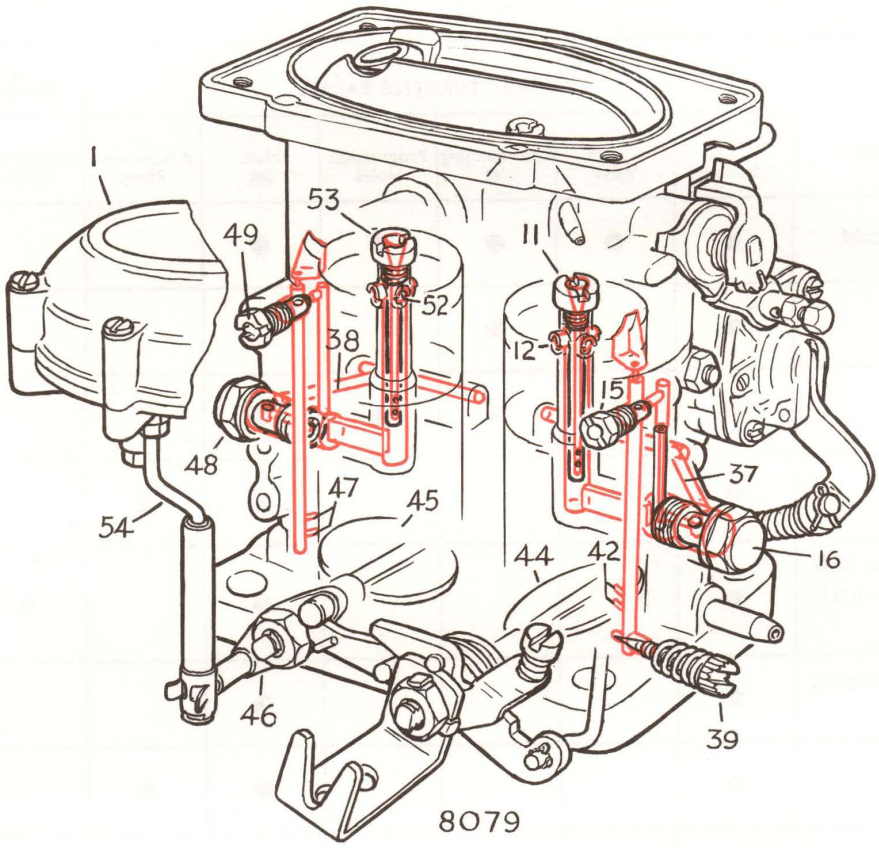

Fig. 2. *Solex B.32 P.A.I.A.S. carburettor — slow running and main spraying passages*

diaphragm, diaphragm return spring, diaphragm cover, and a rod and ball joint connecting the diaphragm to the secondary throttle (16). An internal passage connects the vacuum side of the diaphragm to the cross drillings in the choke tubes.

The secondary throttle is prevented from opening during the first two thirds of the primary throttle opening by the lever (15). After this amount of primary throttle movement, the lever (15) moves clear of the secondary throttle spindle lever, and allows the secondary throttle operating unit (19) to open the secondary throttle. IF THE AIR SPEED THROUGH THE PRIMARY THROTTLE CHOKE TUBE IS HIGH ENOUGH TO CREATE THE NECESSARY SUCTION for atmospheric pressure to lift the diaphragm in the operating unit. The amount of the secondary throttle opening is dependent on the position of the lever (15).

When the primary throttle (14) is closed from fully open to its two thirds position, the lever (15) overrides the action of the secondary throttle operating unit and closes the secondary throttle (16).

The automatic opening and closing of the secondary throttle ensure that it only operates when its action is required.

The secondary throttle is NOT operated by inlet manifold vacuum.

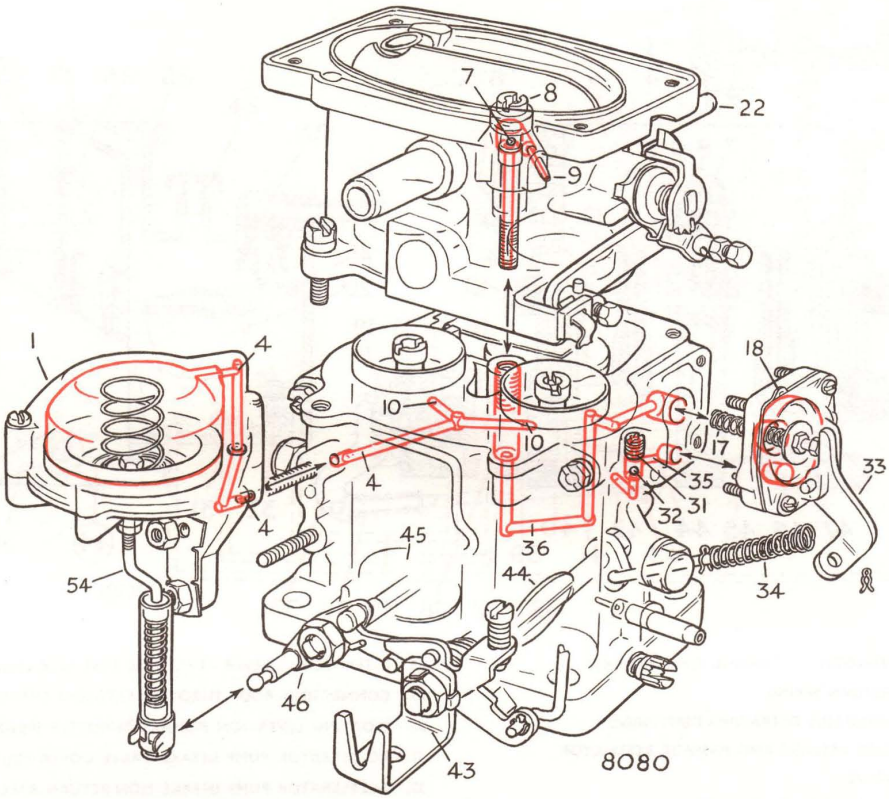

Fig. 3. *Solex B.32 P.A.I.A.S. carburettor — accelerator pump and secondary throttle operating unit passage ways*

CARBURETTOR OPERATION

All carburettors have to provide a fuel air mixture to meet the following operating conditions.

Cold starting.

Slow running.

Part throttle driving.

Acceleration without hesitation.

Full throttle driving.

These requirements are met by the various parts of this carburettor which are described in the following pages. The various internal jets and drillings are shown in Figs. 2 and 3. Fig. 4 gives a fully annotated schematic sectional view and THESE ANNOTATION NUMBERS ARE USED WHENEVER POSSIBLE in Figs. 3 to 11.

A fully exploded view is given in Fig. 14.

A simple summary of how the carburettor action meets most engine requirements is given on page 25.

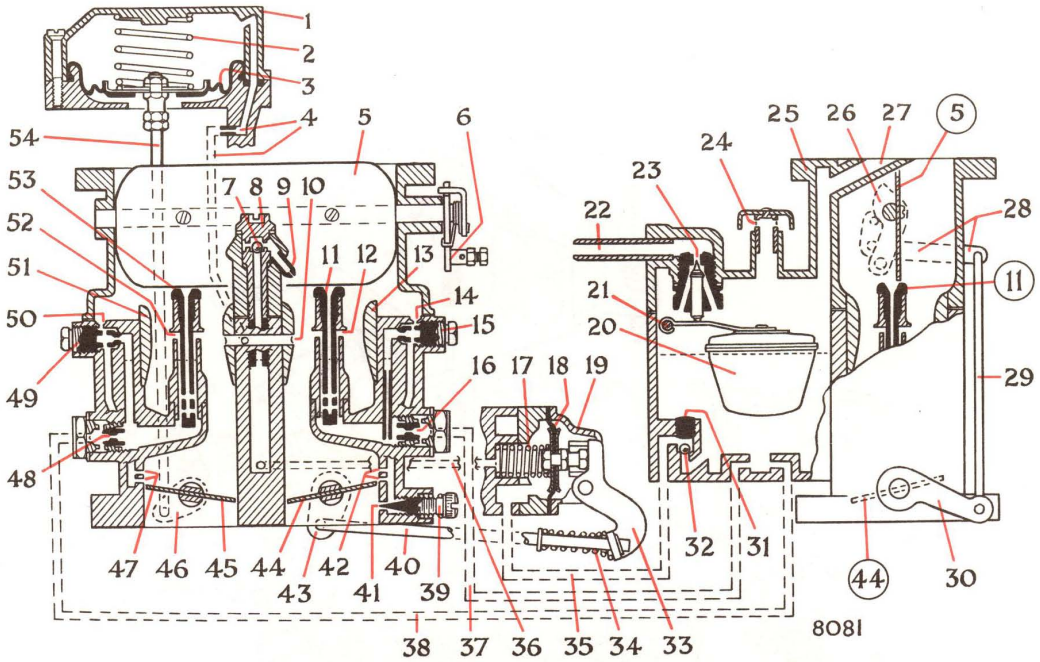

1. SECONDARY THROTTLE OPERATING UNIT HOUSING
2. DIAPHRAGM RETURN SPRING
3. SECONDARY THROTTLE OPERATING DIAPHRAGM
4. DEPRESSION FEED PASSAGE AND PASSAGE RESTRICTOR
5. STRANGLER VALVE
6. STRANGLER VALVE OPERATING LEVER
7. ACCELERATOR PUMP DELIVERY BALL VALVE
8. ACCELERATOR PUMP DELIVERY ASSEMBLY
9. ACCELERATOR PUMP DELIVERY NOZZLE
10. DRILLING IN CHOKE TUBE CONNECTING TO PASSAGE 4
11. PRIMARY THROTTLE BARREL AIR CORRECTION JET AND EMULSION TUBE
12. PRIMARY THROTTLE BARREL MAIN SPRAYING ORIFICES
13. PRIMARY THROTTLE BARREL CHOKE TUBE
14. PRIMARY THROTTLE BARREL PILOT JEY AIR BLEED
15. PRIMARY THROTTLE BARREL PILOT (SLOW RUNNING) JET
16. PRIMARY THROTTLE BARREL MAIN JET
17. ACCELERATOR PUMP DIAPHRAGM RETURN SPRING
18. ACCELERATOR PUMP DIAPHRAGM
19. ACCELERATOR PUMP END COVER
20. FLOAT
21. FLOAT LEVER PIVOT PIN
22. FUEL INTAKE CONNECTION
23. FLOAT NEEDLE VALVE AND SEAT
24. EXTERNAL AIR VENT TO FLOAT CHAMBER
25. CARBURETTOR TOP BODY
26. FAST IDLE LINKAGE OPERATING CAM AND STRANGLER OPERATING LEVER
27. INTERNAL AIR VENT TO FLOAT CHAMBER
28. INTERMEDIATE LEVER—THROTTLE FAST IDLE LINKAGE
29. CONNECTING ROD—THROTTLE FAST IDLE LINKAGE
30. FLOATING LEVER—ON PRIMARY THROTTLE SPINDLE
31. ACCELERATOR PUMP INTAKE VALVE COVER PLUG
32. ACCELERATOR PUMP INTAKE NON-RETURN BALL VALVE
33. ACCELERATOR PUMP OPERATING LEVER
34. ACCELERATOR PUMP OPERATING SPRING
35. FEED PASSAGE TO ACCELERATOR PUMP
36. DELIVERY PASSAGE FROM ACCELERATOR PUMP
37. FEED PASSAGE TO PRIMARY BARREL MAIN JET
38. FEED PASSAGE TO SECONDARY BARREL MAIN JET
39. SLOW RUNNING MIXTURE VOLUME CONTROL SCREW
40. ACCELERATOR PUMP OPERATING ROD
41. SLOW RUNNING OUTLET IN PRIMARY THROTTLE BARREL
42. BY-PASS (PROGRESSION) HOLES IN PRIMARY THROTTLE BARREL
43. PRIMARY THROTTLE OPERATING LEVER
44. PRIMARY THROTTLE
45. SECONDARY THROTTLE
46. SECONDARY THROTTLE OPERATING LEVER
47. SECONDARY THROTTLE BARREL BY-PASS (PROGRESSION) HOLES
48. SECONDARY THROTTLE BARREL MAIN JET
49. SECONDARY THROTTLE BARREL PILOT (PROGRESSION) JET
50. SECONDARY THROTTLE BARREL PILOT JET AIR BLEED
51. SECONDARY THROTTLE BARREL CHOKE TUBE
52. SECONDARY BARREL MAIN SPRAYING ORIFICES
53. SECONDARY THROTTLE BARREL AIR CORRECTION JET AND EMULSION TUBE
54. SECONDARY THROTTLE OPERATING ROD

Fig. 4. *Solex B.32 P.A.I.A.S. carburettor — schematic sectional view*

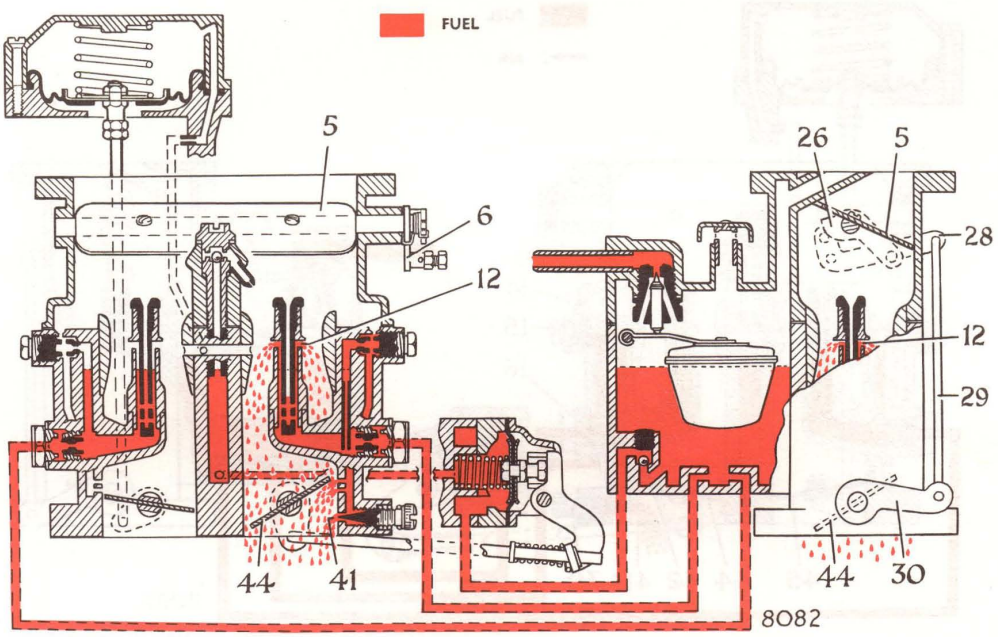

Fig. 5. *Cold starting*

Float chamber — See Fig. 4

Fuel enters the float chamber through the connection (22) in the float chamber cover and passes through the float needle valve (23) into the float chamber. The float needle (23) is operated by the lever attached to the plastic float (20) which rises and closes the float needle valve when the fuel level is correct. This action is entirely automatic and maintains the correct fuel level under all conditions of engine speed and load. The float chamber is vented internally by the short pipe (27) into the carburettor air intake and by an external vent (24) on the top of the float chamber.

Starting from cold — See Figs. 4 and 5

Cold starting conditions require a very rich fuel/air mixture for starting and a progressively weaker mixture until the engine is warm enough to run with the choke (strangler) valve fully open.

These requirements are met by the carburettor action when the choke control is pulled out as far as possible. This closes the choke valve (5), and the cam (26) on the choke valve spindle lever operates a linkage (28), (29) and (30), that opens the PRIMARY throttle (44) to the exact amount needed for cold starting.

Under starting conditions the secondary throttle remains closed. Its movement is prevented by the spring loaded lever (15 — Fig. 1).

As the engine is rotated for starting, with the choke valve (5) closed, the high depression exerted on the PRIMARY main spraying orifices (12) and slow running outlet (41) causes sufficient discharge of fuel for the engine to start.

Directly the engine starts, atmospheric pressure acting on the larger pivoted area of the choke valve causes the choke valve (5) to open a small amount, to allow entry of enough air to keep the engine running. The amount of choke valve opening is controlled by the tension of the choke valve closing spring, which can be adjusted to meet all cold starting conditions, as explained under "ADJUSTMENTS".

As the choke control is pushed back the lever (6) opens the choke valve and allows the throttle to close to its normal slow running position.

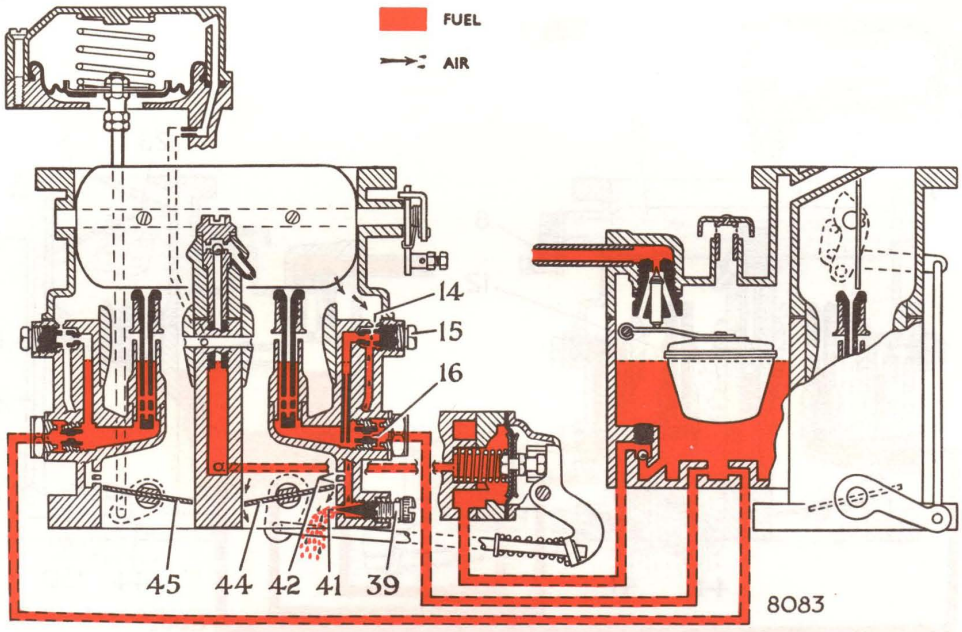

Fig. 6. *Idling operation*

Slow running — See Figs. 2 and 6

When the primary throttle (44) is in the slow running position fuel is metered by the slow running jet (15) which is fed from the float chamber by fuel that passes through the main jet (16) in the primary throttle barrel. Air to emulsify the fuel metered by the slow running jet is drawn through the calibrated air bleed (14). Air is also drawn through the nearly closed primary throttle (44) and by adjusting the slow running volume control screw (39), the amount of emulsified fuel drawn from the slow running outlet (41) can be adjusted so that when mixed with the air passing through the throttle a suitable slow running mixture passes into the inlet manifold.

Further opening of the throttle allows more air to be drawn past the throttle and also uncovers the by-pass orifices (42), sometimes called progression holes, from which additional emulsified fuel is drawn. This maintains the correct mixture strength as the engine speed is increased from slow running to a fast idle speed.

Whenever the engine is idling the secondary throttle (45) is always closed.

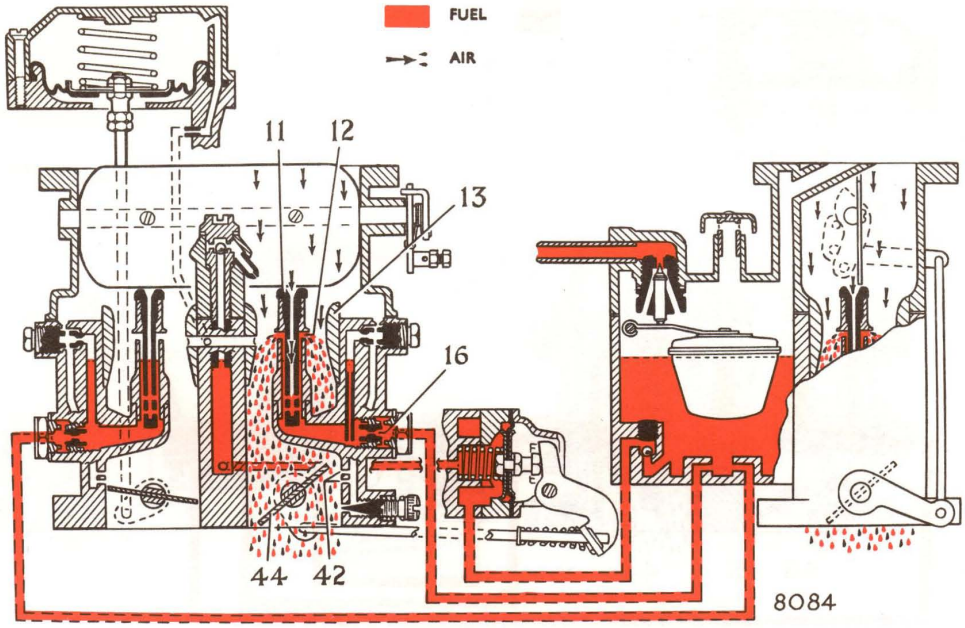

Fig. 7. *Part throttle driving operation*

Normal acceleration to cruising speed —

See Figs. 2 and 7

As the primary throttle (44) is opened past the by-pass orifices (42) the air velocity through the primary choke tube (13) increases. This causes sufficient suction to be exerted on the spraying orifices (12) in the primary barrel, for fuel to be drawn from the emulsion tube well, below the air correction jet (11) and the main jet (16), into the air stream. The amount of fuel, drawn from the emulsion tube well before drawing on the main jet (16), gives the temporary mixture enrichment needed for this condition of operation.

Part throttle driving — See Figs. 2 and 7

This driving condition uses the main jet (16), emulsion tube and air correction jet (11) for supplying the correct amount of fuel to the air stream passing through the primary throttle choke tube (13). If only the main jet was used to control the fuel flow as the throttle was opened, too rich a mixture would be given at wide throttle openings, assuming that the main jet size was correct for a small throttle opening.

As the throttle is opened and air speed through the choke tube (13) in the primary throttle barrel rises, the increased depression acting on the spraying orifice (12) brings the main spraying system into operation. Under this condition fuel flows from the float chamber and is metered by the main jet (16) before passing into the spraying well, below the emulsion tube, where it mixes with air metered by the air correction jet (11); the air entering the fuel stream by means of small holes in the combined emulsion tube and air correction jet (11). From the main well the mixture finally discharges from the spraying orifice (12) into the main air stream. As engine speed increases, the fuel level in the well drops and uncovers the remaining holes in the emulsion tube. In this way additional air enters the fuel stream and corrects the output from the main jet (16) to meet the engine requirements according to speed and load.

During this driving condition, which occurs during the first two thirds of the primary throttle movement, the secondary throttle (45) cannot open because it is held closed by the spring-loaded lever "L" on the primary throttle spindle. See Fig. 10.

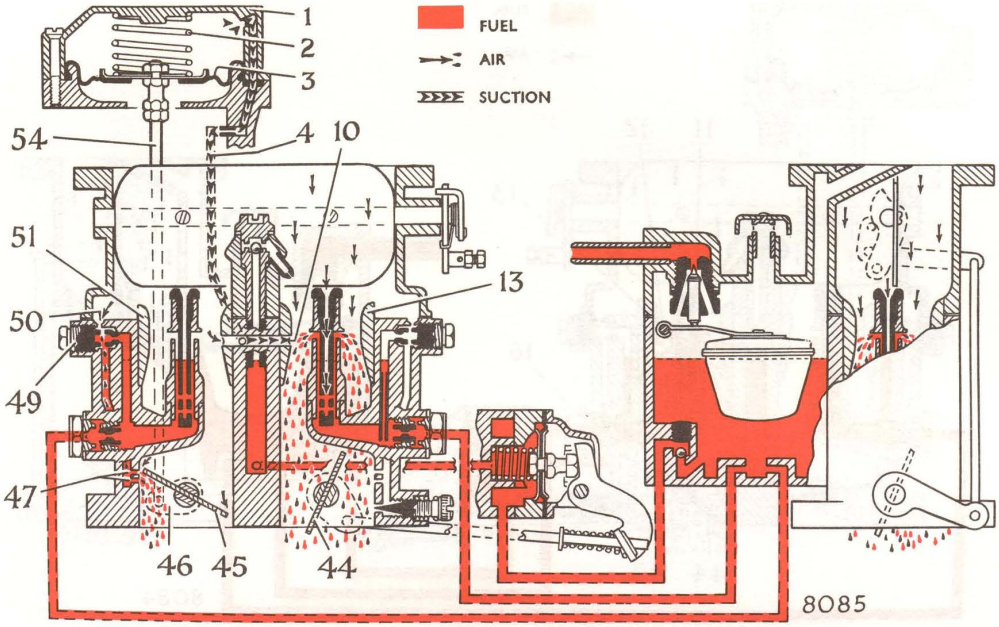

Fig. 8. *Secondary throttle coming into operation*

Wide and full throttle driving — See Figs. 9 and 10

After the primary throttle (44) is two thirds open the primary choke tube (13) and main spraying system can no longer provide sufficient fuel air mixture for further increases of engine speed, and to meet the high speed driving requirements the secondary throttle (45) begins to open. This allows air to pass through the secondary throttle barrel choke tube (51) and for fuel to discharge from first the by-pass orifices (progression holes) (47), and then the main spraying orifices (52) in this throttle barrel. In this way for the last third of the primary throttle movement both throttle barrels can be operated together to provide the correct quantity of fuel/air mixture for higher and maximum speed requirements.

Secondary throttle barrel operation —

See Figs. 8, 9 and 10

The secondary throttle is opened automatically by its operating unit which is shown in sectional form in Figs. 8 and 9. It consists of a diaphragm housing (1), diaphragm (3), diaphragm return spring (2), and rod (54) that connects the diaphragm by a spring-loaded ball joint connection to the lever (46) on the secondary throttle spindle.

The secondary throttle can only open when the following two conditions exist:

1. The primary throttle is open beyond two thirds of its travel.
2. The air speed through the primary choke tube is high enough to create enough suction to allow atmospheric pressure to move the diaphragm (3) in the secondary throttle operating unit.

At low engine speeds, with the engine under load, it is possible for the primary throttle (44) to be fully open and the secondary throttle (45) to remain closed. This is because air speed through the primary choke tube (13) is too low to provide the suction needed in the passage (4) to operate the diaphragm (3).

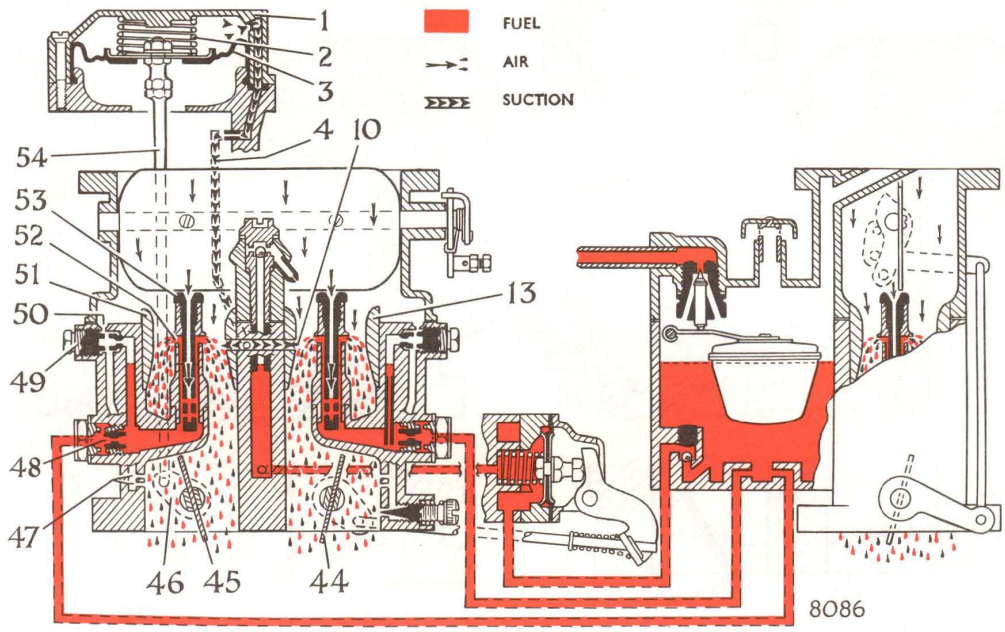

Fig. 9. *Wide throttle driving conditions*

Movement of the diaphragm (3), in the secondary throttle operating unit, takes place when air pressure is reduced on the spring-loaded side of the diaphragm. This occurs when the air flow through the primary choke tube (13) is high enough to create the necessary suction at the cross drilling (10) which connects to the passage (4). The secondary throttle (45) then opens, the amount being dependent on the position of the lever "L" shown in Figs. 10 and (15) in Fig. 1.

When the secondary throttle (45) is open wide enough, air flow through the secondary throttle choke tube (51) increases the suction at the cross drilling (10). This provides the increased suction needed to move the diaphragm (3) against the force of its return spring (2) which becomes greater as the secondary throttle opens.

The secondary throttle barrel has its own choke tube (51) air correction jet and emulsion tube (53), pilot jet (49) and pilot jet air bleed (50) that feeds the by-pass orifice. It has no slow-running outlet orifice. These parts function in a similar manner to those in the primary throttle barrel. The secondary by-pass system is necessary to ensure that fuel is fed into the secondary air stream directly the secondary throttle is open, and to prevent air only passing through the secondary throttle before the secondary main spraying circuit comes into operation.

When the accelerator pedal is released from its full or above two thirds travel position, the secondary throttle, if open, is progressively closed by the heavily spring-loaded lever "L" on the primary throttle spindle, and is fully closed against its adjustable stop when the primary throttle is closed to its two thirds open position or beyond.

Fig. 10 shows various conditions of the primary and secondary throttle openings.

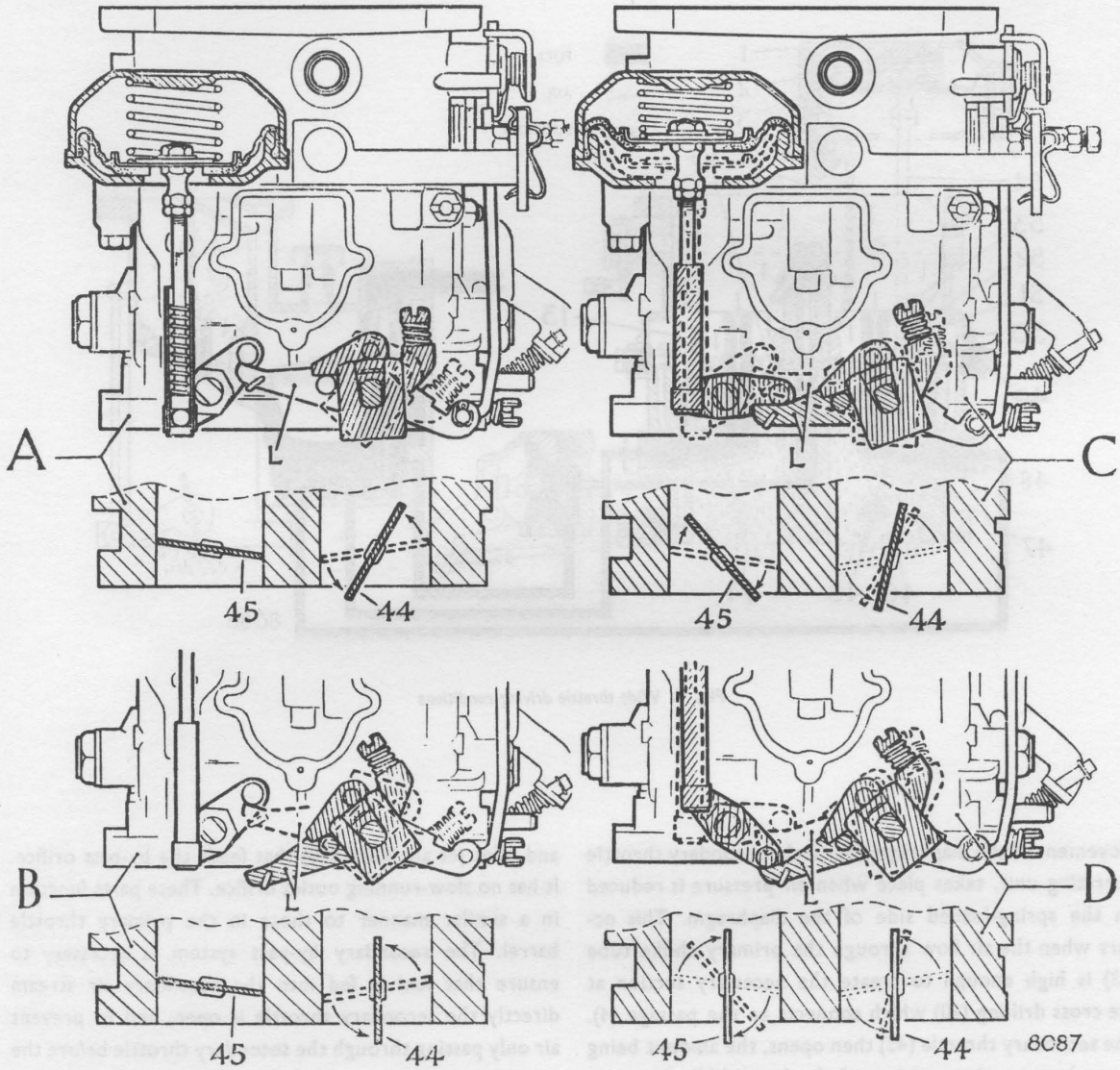

A. Primary throttle (44) movement during which secondary throttle is (45) always closed.

B. Primary throttle (44) operating range, when engine speed is too low to provide the necessary suction in the primary throttle choke tube, to actuate the secondary throttle operating unit.

C. & D. Primary throttle (44) movement needed when sufficient suction exists in the primary choke tube to open the secondary (45) throttle. (C) half-way; (D) fully open.

Fig. 10. *Primary and secondary throttle operation*

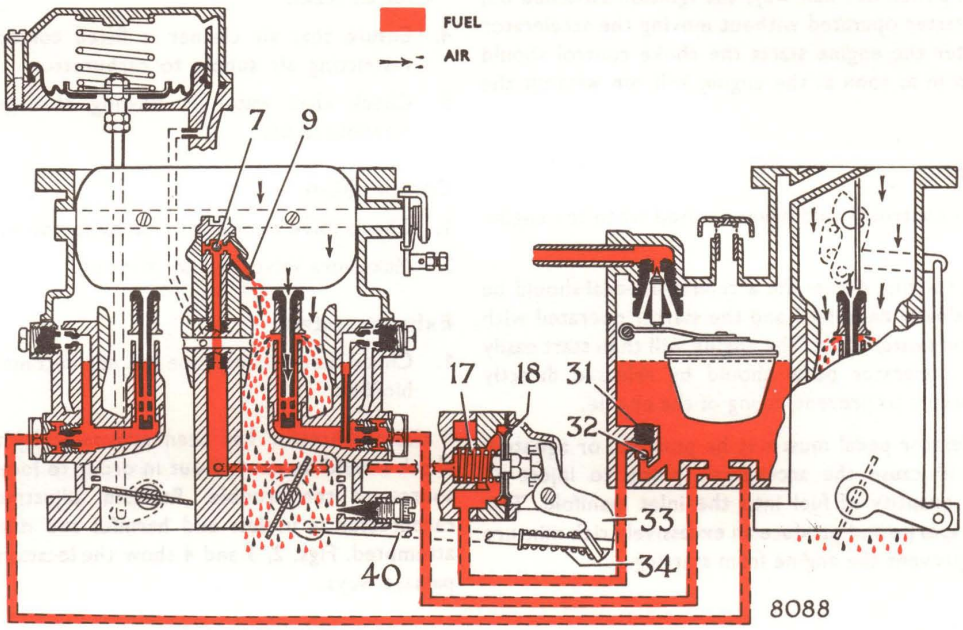

Fig. 11. *Acceleration — accelerator pump in operation*

Acceleration and the accelerator pump —

See Figs. 3 and 11

To ensure immediate engine response, when the primary throttle is suddenly opened, a temporary metered supply of extra fuel is needed. This fuel is provided by a mechanically operated diaphragm type accelerator pump connected to a short lever on the primary throttle spindle.

When the accelerator pedal is released the pump diaphragm return spring (17) forces the diaphragm (18) outwards which draws fuel into the accelerator pump through its non-return valve (32).

When the accelerator pedal is depressed the primary throttle (44) opens and the spring (34) is compressed on the connecting rod (40). This pushes the pump lever (33) which compresses the diaphragm (18) and causes fuel to be discharged from the jet (9) into the primary choke tube after lifting the non-return delivery ball valve (7). The accelerator pump non-return valve (32) inside the float chamber is situated below the plug (31).

STARTING THE ENGINE

From cold

When starting the engine from cold, the choke control is pulled fully out, the ignition switched on and the starter operated WITHOUT MOVING THE ACCELERATOR PEDAL. When the engine starts the control is pushed back to a suitable fast idle position for driving away. The control should be pushed fully in directly the engine will run without hesitation.

From extreme cold (below 10°C, 14°F)

When starting under extremely cold conditions FIRST — FULLY DEPRESS THE ACCELERATOR PEDAL THREE TIMES. Then follow the procedure previously given for starting from cold.

Partly warm

Very slightly depress the accelerator pedal, switch on the ignition, and operate the starter. In most cases the engine will start immediately and idle properly directly the accelerator pedal is released.

If the engine will not start in this way the choke control should be pulled out half way, the ignition switched on, and the starter operated without moving the accelerator pedal. After the engine starts the choke control should be pushed in as soon as the engine will run without the choke.

When hot

The choke control should never be used when the engine is hot.

If difficult starting occurs the accelerator pedal should be fully and slowly depressed and the starter operated with the ignition switched on. The engine will then start easily and the accelerator pedal should be released directly starting occurs to prevent racing of the engine.

The accelerator pedal must not be pumped, or agitated, as this will cause the accelerator pump to inject an excessive quantity of fuel into the inlet manifold. This fuel will vaporise and produce an excessively rich mixture that will prevent the engine from starting.

DIAGNOSIS OF FAULTS

Since the function of the carburettor is closely connected with other items of engine operation, troubles are sometimes difficult to trace and the carburettor is often blamed when it is not at fault.

Unless known to be in perfect condition, the following items should be checked before making carburettor adjustments:

Ignition system

1. Check spark plug condition. Clean and set gaps.
2. Check condition and tightness of H.T. and L.T. leads.
3. Check condition and setting of contact breaker points and contact moving point spring tension.
4. Ensure that the centrifugal and vacuum advance mechanism is working correctly.
5. Check ignition timing. Only small variations from the correct static timing are permissible.

Fuel system

1. Ensure that an adequate supply of fuel is being delivered to the float chamber.
2. Check that fuel pump output pressure is correct to the figures given in the General Data Section of this manual.
3. Examine induction manifold and carburettor flange for air leaks.
4. Ensure that air cleaner is fitted correctly and not restricting air supply to carburettor.
5. Check that water is flowing through the inlet manifold jacket.

Compression

1. Check valve clearances and compressions.
2. Make sure valves are not sticking.

Exhaust system

1. Check that exhaust pipe has not become damaged or blocked.

If the carburettor has been proved faulty a systematic check should be carried out in order to locate the exact source of the trouble. Random adjustment on the carburettor is useless and harmful and must never be attempted. Figs. 2, 3 and 4 show the locations of jets and passage ways.

Excessive fuel consumption — See Fig. 4

Causes

1. Difficult operating conditions such as town driving or very hilly country.
2. Leakage in the fuel system.
3. Partial flooding.
4. Incorrect jets fitted.
5. Choke operating cable incorrectly adjusted.

Rectification

1. Ensure that engine is correctly tuned. Carry out fuel consumption test over known test route to check consumption under normal driving conditions.
2. Check fuel system for leakage starting at the fuel tank, checking all unions, fuel lines, and every possible place at which fuel can leak.
3. Ensure that float needle and seat assembly (23) is properly tightened in carburettor top body and that the single joint washer under the seating is in position and not damaged.
   Renew float needle/seat assembly and float if these items are in any way suspect.
4. Ensure that the correct sizes of air correction jets emulsion tubes and main jets are fitted. The sizes for these are given under "Fuel System" in the Data Section. Check that the main jets are tight in their holders and are in their respective throttle barrels.

5. Check that the choke operating cable is correctly adjusted so that the operating lever (6) is against its back stop, when the choke control is $\frac{1}{16}$ in. (1·5 mm.) from the full-in position.

Insufficient top speed — See Fig. 4

Causes

1. Primary throttle (44) not opening fully. This will also prevent full opening of the secondary throttle.

2. Secondary throttle spindle sticking preventing normal automatic opening.

3. Secondary throttle (45) sticking closed due to incorrect adjustment of its closed position stop screw.

4. Secondary throttle operating unit not opening secondary throttle correctly.

5. Secondary barrel main jet (48) blocked.

6. Main jet sizes incorrect.

Rectification

1. Check that the primary throttle (44) is opened fully when the accelerator pedal is pressed down on to the FLOOR COVERINGS.

2. Hold the primary throttle (44) fully open. Disconnect the ball joint on the end of the rod (54) from the secondary throttle arm (46) and check that the secondary throttle (45) is perfectly free to open and close against its stop. Close the secondary throttle firmly against its closed position with finger and thumb pressure and check that it is not sticking in its closed position when the carburettor is COLD and again when it is HOT.
Reconnect the ball joint and check that the operating unit diaphragm can lift the secondary throttle fully open. This is done by lifting the diaphragm on its connecting rod (54) just below the locknut above the ball joint with a small pair of pliers.

3. Adjust the secondary throttle stop screw as explained under "ADJUSTMENT — Secondary throttle stop".

4. High speed is dependent upon the correct operating of the secondary throttle (45), after the primary throttle lever allows it to open and if its operating unit is defective the secondary throttle will not open properly. For this unit to operate correctly there must be:

   (*a*) An air-tight diaphragm (3).

   (*b*) An air-tight joint between the operating unit operating unit and the carburettor body. A suitable joint is used between these two faces.

   (*c*) Clear passage ways (10) and (4) between the choke tube and the diaphragm upper face. A small brass dowel with a small restriction drilling is used between the unit face and carburettor body. This must be clear.

The secondary operating unit can be tested, after removing it from the carburettor, by holding a suitable piece of rubber tube over its brass locating dowel and sucking air through the tube by holding the other end of the tube in the mouth. This suction should move the diaphragm over the whole of its operating range. After this the unit should be immersed in water, so that it is just covered, and the diaphragm depressed by finger and thumb pressure while the other first finger blocks off the brass dowel inlet hole. If the diaphragm is faulty air bubbles will be seen.

5 & 6. Check that both main jets (16) and (48) are clear and are the correct size given in the Data Section under "Fuel System".

Faulty slow-running — See Fig. 4

Causes

1. Slow-running adjustment incorrectly set.

2. Slow-running pilot jet (15) blocked.

3. Slow-running passage way partly blocked.

4. Incorrect operation of crankcase ventilation regulator fitted in the inlet manifold (if fitted). See section B index.

5. Air leak at carburettor flange joint or on induction manifold to cylinder head joint.

6. Secondary throttle closed stop incorrectly set. This allows too much air to pass by the closed secondary throttle when the engine is idling.

Rectification

1. Adjust the slow-running as described under "ADJUSTMENTS".

2. Remove slow-running (pilot) jet (15) and blow through its metering orifice, with clean compressed air as it is not possible to see through the actual orifice.

3. Remove slow-running volume control screw (39) and slow-running jet (15). Blow through slow-running system passage ways and replace jet and screw. The latter should be screwed on to its seat by finger pressure only and turned back one complete turn before running the engine to adjust the slow running.
4. Remove crankcase ventilation regulator from the inlet manifold. Dismantle clean and check as described in Section B.
5. Remove carburettor and induction manifold. Check flange for distortion and carefully reface if necessary. Refit with new joints.
6. Adjust secondary throttle stops as describe under "ADJUSTMENTS".

Flat spot at small primary throttle opening — See Fig. 4

Causes

1. Slow-running adjustment set too weak.
2. By-pass (progression) holes (42) obstructed in the primary throttle barrel.
3. Secondary throttle closed stop incorrectly set.

Rectification

1. Adjust the slow running to give reliable idling just off of the rich or "hunting" conditions.
2. If the flat spot still exists blow through the by-pass (progression) holes (42) in the primary throttle barrel with compressed air. This can be done with the carburettor in position by removing the slow running jet (15) and lightly screwing the volume control screw (39) on to its seal. The compressed air supply is then applied at the slow-running jet location. Re-adjust volume control screw (39).
3. Adjust the secondary throttle closed position stop as described under "ADJUSTMENTS".

Flat spot at wide primary throttle opening — See Fig. 4

Causes

1. Secondary throttle stiff in action.
2. By-pass (progression) holes (47) in the secondary throttle barrel partly or fully blocked.
3. Secondary throttle operating unit defective.

Rectification

1. Check that the secondary throttle (45) is perfectly free to operate over its whole range, particularly from its closed position.
2. Blow through the by-pass orifices (progression) holes (47) in the secondary throttle barrel. This can be done by applying compressed air at the secondary barrel pilot jet (49) position after removing the jet.
3. Check action of the secondary throttle operating unit as described under "Insufficient top speed".

Poor acceleration — See Figs. 3 and 4

Causes

Faulty operation of the accelerator pump which prevents the temporary enrichment of the mixture needed when the primary throttle is suddenly opened.

Rectification

1. Check that the small circlips, on the accelerator pump push rod (40) are in place. If the circlip behind the spring (34) is missing the accelerator pump actuating lever (33) will not operate correctly when the primary throttle (44) is opened.
2. Check through the whole of the accelerator pump circuit in the following order.

   Remove carburettor top body and float. This requires the removal of the combined screw (8) and discharge ball valve.

   Remove the blank plug (31) and ball valve (32) below plug in float chamber.

   Remove the four corner flat headed brass screws holding the accelerator pump to the carburettor body, and the circlip in the outer end of the accelerator pump operating rod (40). Lift off pump assembly from carburettor body.

   Remove the two brass screws holding the accelerator pump end cover (19) to its body. Remove cover and inspect diaphragm (18) and renew if faulty.

   Blow through passages (35) and (36) with compressed air. These passages feed and discharge fuel to and from the accelerator pump chamber. They are shown in Figs. 3 and 4.

   Replace intake ball valve (32) and plug (31).

   Reassemble accelerator pump. When refitting the diaphragm (18) it should be pushed against its back stop on its operating lever side, before tightening the two screws that hold the pump cover plate (19) to the accelerator pump body. This ensures that the diaphragm can move over its whole range and pump effectively.

Difficult starting from cold — See Figs. 4 and 5

Causes

1. Incorrect use of choke control.
2. Choke control lever (6) not moved to the full extent of its travel when the choke control is pulled out fully.
3. Choke valve spindle sticking in its bearings and preventing full closing of the choke valve (5), when the lever (6) is moved over to the full extent of its travel. This can be checked by observing the position of the bent over lever on the end of the choke spindle. The bent lever should always follow the lever (6) when the choke control is pulled out.
4. Primary throttle not opening to the correct cold starting fast idle position, when the choke control is pulled out fully. If this occurs the engine cannot run at the proper cold fast idling speed after starting.
5. Choke valve return spring tension incorrectly adjusted.

Rectification

1. See under "STARTING THE ENGINE".
2. Adjust choke control cable. See under "ADJUSTMENT".
3. Remove air cleaner and pull choke control out fully. With a thin oil lubricate the choke valve spindle at its two ends, until the choke valve will snap shut.
4. Adjust the primary throttle fast idle position — See under "ADJUSTMENTS".
5. Adjust the choke valve return spring as described under "ADJUSTMENTS".

ADJUSTMENTS

The only adjustments are:

1. Slow running mixture and slow running speed.
2. Choke control cable.
3. Secondary throttle closed position stop.
4. Secondary throttle operating rod.
5. Primary throttle fast idle setting.
6. Choke valve return spring tension.
7. Primary full throttle position and accelerator pedal position.

Slow-running — to adjust — See Fig. 13

Adjust the slow-running speed adjustment screw (8) to the engine idling speed given in the Data Section under "Fuel System".

Adjust the slow-running volume control screw (7) so that the engine is running evenly with the screw rotated clockwise as far as possible.

The slow running mixture volume control screw is quite sensitive to adjust because it regulates the amount of fuel used for slow running. It does NOT control the air feed for slow running.

Re-adjust the engine speed if necessary with the slow-running speed adjustment screw (8).

When this adjustment is finished the engine should be running evenly at the idling speed given under "Fuel System" in the Data Section.

Any "hesitancy" or "flat spot", as the throttle is moved from the idling position, when starting from rest, driving slowly or accelerating, is sometimes an indication that the slow running mixture is either too weak or too rich, and that further slight adjustment is needed.

Choke control cable

Release the set screw holding choke control inner cable end, at the lever.

Push the outer cable into its fixing abutment as far as possible and tighten its securing set screw.

Push the choke valve operating lever over against its operating stop farthest from its outer cable fixing.

Position the choke control so that its knob is $\frac{1}{8}$ in. (3 mm.) from its full-in position, and tighten set screw securing inner cable at lever end.

Pull choke control outward as far as possible and check that the choke valve operating lever comes against the other stop nearest to the outer cable fixing position.

Push choke control fully inwards and check that the choke valve operating lever comes against its stop farthest from its outer cable fixing.

Secondary throttle stop — See Figs. 4 and 12

This is a very important adjustment. It prevents the secondary throttle barrel jet system from supplying fuel when the primary throttle barrel only is needed. It also ensures that the secondary throttle cannot stick closed. The adjustment needed cannot be made with the carburettor in position because it is necessary to measure the clearance between the secondary throttle and its throttle bore.

1. Remove the carburettor, clean its exterior and carefully scrape away any varnish deposits in both throttle bores.

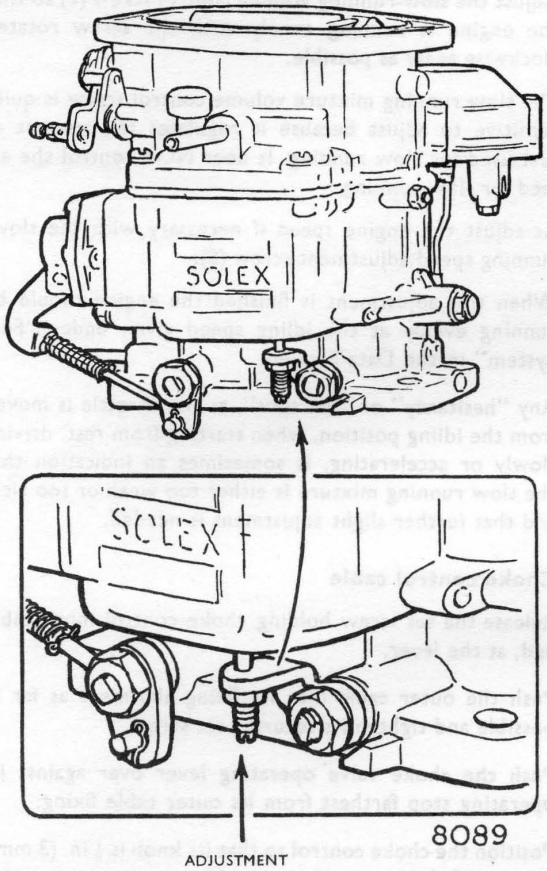

Fig. 12. *Secondary throttle closed position stop*

2. Release the spring-loaded ball joint to disconnect the shaft (54) from the secondary throttle ball joint on the secondary throttle spindle lever (46).

3. Hold the primary throttle (44) in its fully open position by inserting a short length of $\frac{1}{2}$ in. (12 mm.) diameter bar between the open primary throttle and its throttle bore.

4. Adjust the secondary throttle stop shown in Fig. 12 so that secondary throttle has ·002 in. (·05 mm.) clearance between the throttle plate (45) and its throttle bore, at EACH SIDE of its diameter at right angles to the throttle spindle.
   A ·002 in. (·05 mm.) feeler, $\frac{3}{16}$ in. (5 mm.) wide should be used for checking the throttle plate clearance.
   If the clearances are uneven the throttle plate fixing screws should be loosened off so that the throttle plate centralises as its clearance is checked. Re-tighten the fixing screws when similar clearances are obtained.

5. Refit the carburettor and adjust the slow-running as described under "ADJUSTMENTS".

Secondary throttle operating rod — See Fig. 4

This rod (54) is adjusted in its diaphragm end so that its ball joint end lines up with the ball on the secondary throttle lever (46), when the secondary throttle (45) is closed and the diaphragm (3) is at the bottom of its stroke.

Primary throttle fast idling position — for cold starting — See Fig. 13

This adjustment can be made by one of the two following methods. The second method, which requires the removal of the carburettor should always be used when making this adjustment for extreme cold starting conditions.

Method 1 — Without removing carburettor — See Fig. 13

1. Release the set screw (5) holding the connecting rod in the trunnion on the outer end of the lever (4).

2. Unscrew the slow running speed adjustment screw (8) until its end is clear of the boss on the carburettor body. Then, holding the throttle closed very firmly, screw down the slow running speed adjustment screw (8) until it just contacts the boss on the carburettor body, and from this position screw it down a further $4\frac{1}{2}$ turns. This opens the throttle to the correct position for cold starting.

3. Pull the choke control out fully and check that the lever arm (3) is against its back stop.

4. Lift the connecting rod (6) lightly so that the floating arm (9), at its lower end, just contacts the underside of the throttle lever extension which carries the slow running speed adjustment screw (8). Then tighten the set screw (5). This ensures that the primary throttle is opened to the correct position when the choke control is pulled out fully.

5. Return the choke control to its fully back position.

6. Adjust the slow running speed adjustment screw (8) to give the correct idling speed.

Method 2 — With carburettor removed from engine — See Fig. 13

1. Remove the carburettor from the engine.

2. Obtain a gauge to the dimension given as Fast Idle Gap under Fuel System in the Data Section for insertion between the throttle butterfly and throttle barrel. This can be the shank of a drill or a wire of this diameter or wire flattened to this dimension.

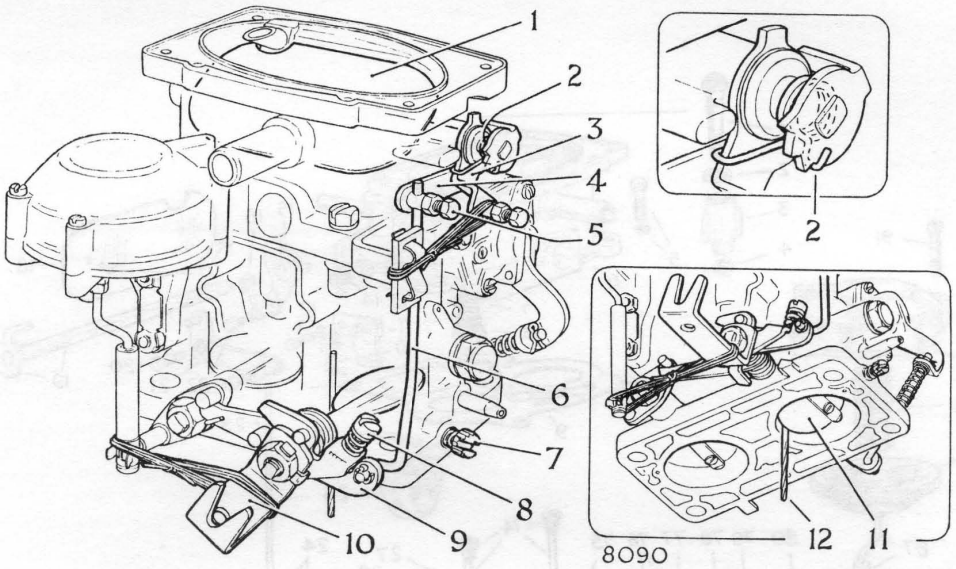

1. CHOKE VALVE
2. CHOKE VALVE CLOSING SPRING
3. CHOKE VALVE CONTROL LEVER
4. INTERMEDIATE LEVER
5. FAST IDLE SPEED ADJUSTMENT SET SCREW
6. CONNECTING ROD
7. SLOW RUNNING MIXTURE VOLUME CONTROL SCREW
8. SLOW RUNNING SPEED ADJUSTMENT SCREW
9. FLOATING LEVER
10. PRIMARY THROTTLE OPERATING LEVER
11. PRIMARY THROTTLE
12. CHECKING GAUGE

Fig. 13. *Primary throttle fast idle adjustment and strangler valve return spring adjustment*

3. Move the choke lever (3) to the full extent of its travel and tie it in this position, so that the lever cannot move away from its forward stop.
4. Release the setscrew (5) on the trunnion on the upper end of the connecting rod (6).
5. Insert the checking gauge (12) between the primary throttle (11) edge and throttle bore at a right angle to the centre of the throttle spindle, and tie the throttle shaft extension back so that the throttle holds the gauge against the throttle bore.
6. Lift the connecting rod (6) lightly so that the floating lever (9), at its lower end, just contacts the underside of the throttle lever extension. Then tighten the set screw (5).
7. Release the means used to secure the throttle and choke lever and move the choke lever (3) over its whole range of movement. Then check that the primary throttle opens to the amount of the gauge dimension.
8. Refit the carburettor and adjust the choke cable.

Choke valve return spring tension — See Fig. 13

For most cold starting conditions the looped end of the choke valve return spring (2) should be in the vee notch that gives the lightest opening movement of the choke valve as shown in Fig. 13. At very low temperatures the spring tension may need increasing by moving the looped end into one of the other two positions, so that the choke valve opening tension is increased.

Primary full throttle position and accelerator pedal position

An adjustment for setting the accelerator pedal position is provided at the end of the throttle operating shaft.

This adjustment should be set so that the primary throttle is fully open when the accelerator pedal is 1 in. (25 mm.) from the floor covering.

IF THE PRIMARY THROTTLE CANNOT OPEN FULLY IT PREVENTS FULL OPENING OF THE SECONDARY THROTTLE.

CLEANING — See Fig. 4

The jets, passage ways and float chamber can be cleaned without removing the carburettor if the following procedure is used.

1. Remove the air cleaner.
2. Remove the small outer split pin at the lower end of the connecting rod (29) and move the rod end out of the floating lever (30), DO NOT LOOSEN the set screw of the trunnion at the upper end of the rod.

continued on page 44

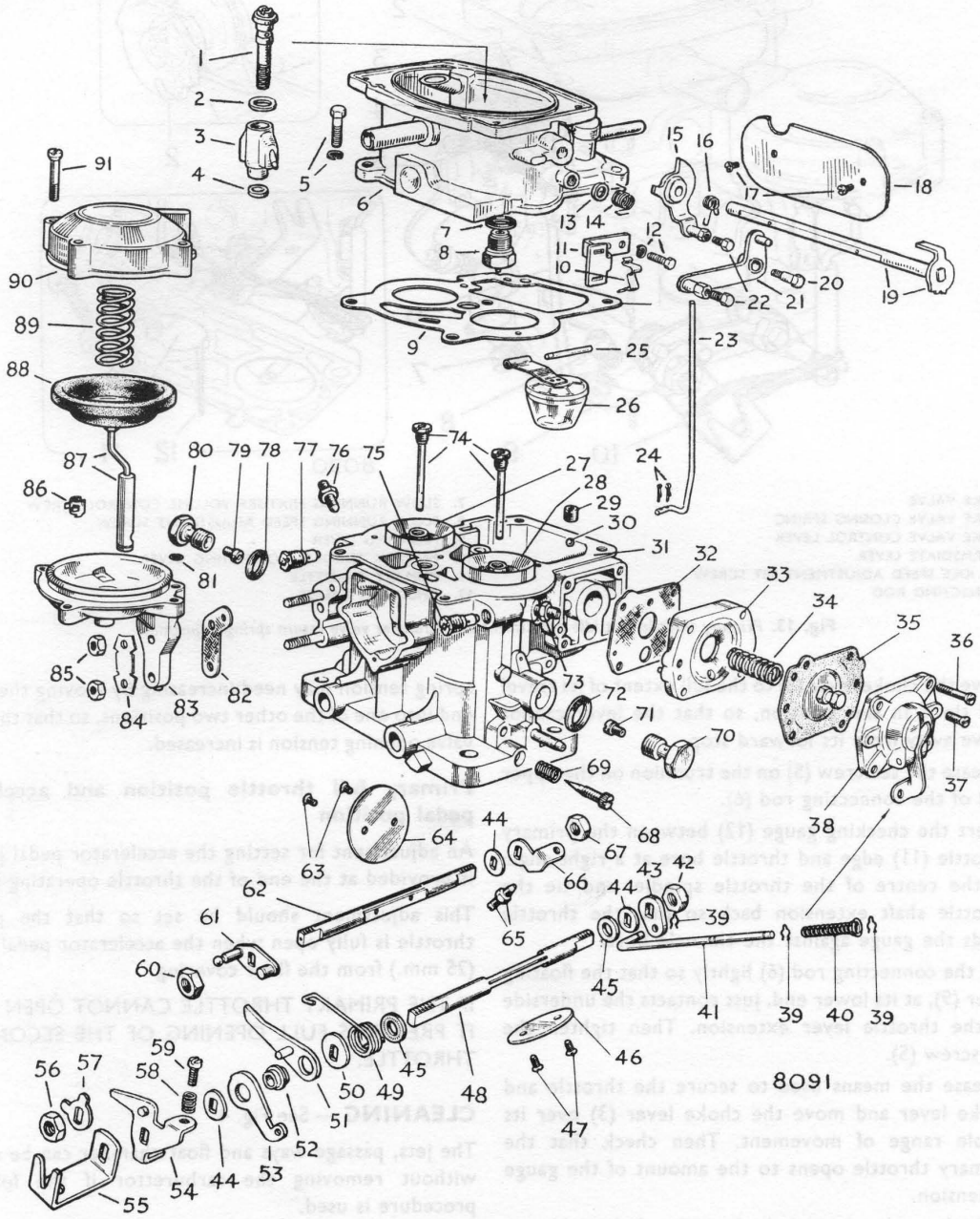

Fig. 14. *Solex B.32 P.A.I.A.S. carburettor — exploded view*

CARBURETTOR PARTS

—See Fig. 14.

1. ACCELERATOR PUMP INJECTOR FEED TUBE
2. WASHER
3. ACCELERATOR PUMP INJECTOR
4. WASHER
5. CARBURETTOR TOP BODY FIXING SCREW AND WASHER—FOUR USED
6. CARBURETTOR TOP BODY
7. WASHER FOR NEEDLE VALVE SEATING
8. FLOAT NEEDLE VALVE AND SEATING
9. GASKET
10. CHOKE CABLE FIXING AND ABUTMENT CLIP
11. CHOKE CABLE MOUNTING BRACKET
12. BRACKET FIXING SCREW AND WASHER
13. SPACING WASHER
14. RETURN SPRING—CHOKE OPERATING LEVER
15. CHOKE OPERATING LEVER
16. CHOKE VALVE CLOSING SPRING
17. CHOKE VALVE FIXING SCREWS
18. CHOKE VALVE
19. CHOKE VALVE SPINDLE
20. SHOULDERED PIVOT BOLT—INTERMEDIATE LEVER
21. INTERMEDIATE LEVER
22. SET SCREWS—CHOKE INNER CABLE AND CONNECTING ROD
23. CONNECTING ROD
24. SPLIT PINS
25. FLOAT PIVOT PIN
26. FLOAT
27. CHOKE TUBE—SECONDARY THROTTLE BARREL
28. CHOKE TUBE—PRIMARY THROTTLE BARREL
29. ACCELERATOR PUMP BALL VALVE COVER PLUG
30. ACCELERATOR PUMP INTAKE BALL VALVE
31. CARBURETTOR MAIN BODY
32. JOINT—ACCELERATOR PUMP TO MAIN BODY
33. ACCELERATOR PUMP BODY
34. ACCELERATOR PUMP DIAPHRAGM RETURN SPRING
35. ACCELERATOR PUMP DIAPHRAGM
36. ACCELERATOR PUMP FIXING SCREW—FOUR USED
37. ACCELERATOR PUMP COVER FIXING SCREW—TWO USED
38. ACCELERATOR PUMP COVER AND LEVER ASSEMBLY
39. CIRCLIPS
40. ACCELERATOR PUMP LEVER OPERATING SPRING
41. ACCELERATOR PUMP OPERATING ROD
42. LEVER RETAINING NUT
43. ACCELERATOR PUMP OPERATING LEVER
44. SPACING WASHER
45. NYLON SEALING WASHER
46. PRIMARY THROTTLE
47. PRIMARY THROTTLE FIXING SCREWS
48. PRIMARY THROTTLE SPINDLE
49. RETURN SPRING—SECONDARY THROTTLE RETURN LEVER
50. WASHER
51. LEVER SECONDARY THROTTLE RELEASE AND RETURN
52. BEARING FOR LEVERS 51 AND 53
53. FLOATING LEVER—PRIMARY THROTTLE FAST IDLE LINKAGE
54. PRIMARY THROTTLE ABUTMENT PLATE
55. PRIMARY THROTTLE OPERATING LEVER
56. NUT — PRIMARY THROTTLE LEVER
57. LOCK WASHER
58. SLOW RUNNING SPEED ADJUSTMENT SCREW SPRING
59. SLOW RUNNING SPEED ADJUSTMENT SCREW
60. NUT—SECONDARY THROTTLE OPERATING LEVER
61. SECONDARY THROTTLE OPERATING LEVER
62. SECONDARY THROTTLE SPINDLE
63. SECONDARY THROTTLE FIXING SCREWS
64. SECONDARY THROTTLE
65. SECONDARY THROTTLE CLOSED POSITION STOP SCREW AND LOCK NUT
66. SECONDARY THROTTLE STOP PLATE
67. STOP PLATE FIXING NUT
68. SLOW RUNNING MIXTURE VOLUME CONTROL SCREW
69. VOLUME CONTROL SCREW SPRING
70. MAIN JET HOLDER
71. MAIN JET — PRIMARY THROTTLE BARREL
72. WASHER — MAIN JET HOLDER
73. SET SCREW AND LOCK NUT HOLDING PRIMARY THROTTLE BARREL CHOKE TUBE
74. AIR CORRECTION JETS AND EMULSION TUBES, PRIMARY AND SECONDARY THROTTLE BARRELS
75. SLOW RUNNING JET—PRIMARY THROTTLE BARREL
76. SET SCREW AND LOCK NUT HOLDING SECONDARY THROTTLE BARREL CHOKE TUBE
77. PROGRESSION JET—SECONDARY THROTTLE BARREL
78. WASHER — MAIN JET HOLDER
79. MAIN JET—SECONDARY THROTTLE BARREL
80. MAIN JET HOLDER
81. SMALL RUBBER SEALING RING
82. JOINT—SECONDARY THROTTLE OPERATING UNIT TO CARBURETTOR MAIN BODY
83. SECONDARY THROTTLE OPERATING UNIT BODY
84. LOCKING PLATE
85. SECONDARY THROTTLE OPERATING UNIT HOLDING NUTS
86. BALL JOINT FIXING CLIP
87. CONNECTING ROD AND SPRING LOADED BALL JOINT
88. SECONDARY THROTTLE OPERATING DIAPHRAGM
89. DIAPHRAGM RETURN SPRING
90. SECONDARY OPERATING UNIT COVER
91. COVER FIXING SCREW — FOUR USED

3. Remove the carburettor top body and lift out float (20) and float lever pivot shaft (21).
4. Remove primary air correction jet (11) primary main jet (16) holder and primary slow running (pilot) jet (15) from the primary throttle barrel. This will drain off some of the fuel in the float chamber. The remaining fuel can be soaked away with clean lintless rag after which the float chamber should be blown out with clean compressed air.
5. If water is present in the float chamber the accelerator pump should be drained by almost removing the four long brass screws at each corner of the accelerator pump, and drawing the fuel pump assembly, away from the float chamber. This allows the pump compartment to drain. Retighten the four pump securing screws. Water in the float chamber can be an indication that the entire fuel system needs draining and cleaning of water.
6. With a suitable air nozzle blow compressed air into the slow running jet, main jet and air correction jet positions. After this blow through air correction jet (11), slow running jet (15) and main jet (16). Refit all jets.
7. Repeat this procedure in the secondary throttle barrel.
8. Remove the accelerator pump intake valve cover plug (31) in the float chamber and feed tube assembly (8). Hold a finger lightly over this hole to prevent loss of the non-return ball valve (32) and blow compressed air down the accelerator pump delivery assembly hole.
9. Blow through the fuel intake pipe (22).
10. Reassemble carburettor and prime float chamber by operating the engine starter or fuel pump primary lever (if fitted). Open the primary throttle and check that fuel is discharged from the accelerator pump delivery nozzle (9).
11. Refit air cleaner.

TO REMOVE

1. Remove air cleaner top body.
2. Disconnect fuel pipe from its connection on the float chamber.
3. Remove vacuum advance pipe and crankcase ventilation pipe from their connections on the carburettor.
4. Disconnect choke control operating inner and outer operating cable.
5. Disconnect throttle operating shaft at carburettor end.
6. Remove four ½ in. A.F. nuts and flat washers. Lift off carburettor and blank off flange on inlet manifold.

TO REFIT

Check the carburettor flange face for flatness and carefully reface if necessary. After refacing the flange face must be checked with marking on a small surface plate, or other reliable flat face. The use of a straight edge is not a satisfactory method of checking carburettor flanges for flatness, and particularly so on this carburettor.

Remove blank placed over inlet manifold flange.

One gasket is used between each side of the thick heat insulating joint fitted between the carburettor and inlet manifold.

Overtightening of the four carburettor flange fixing nuts can distort the carburettor flange.

Refit all other items removed in reverse order to that used for their removal and check adjustments of choke control cable as described under "ADJUSTMENTS".

NOTES ON DISMANTLING AND REASSEMBLY

See Fig. 14

A fully exploded view of the carburettor from which the particular position of any part can be seen is given in Fig. 14. Many of these parts can be removed and replaced with the carburettor in position on the engine.

Particular attention should be given to the following:

1. Pilot jets (75) and (77), main jets (71) and (79), and choke tubes (27) and (28) must be fitted to their respective throttle barrels. In some instances they are not interchangeable.
2. The choke tubes (27) and (28) are held in position by the two pointed set screws and locknuts (73) and (76). They are located correctly by narrow slots on their lower ends.
3. A joint (82) is used between the secondary throttle operating unit body (83) and the carburettor main body (31).
4. The small rubber sealing ring (81) must be used at its location on the vacuum passage between the secondary throttle operating unit cover (90) and body (83).
5. A brass dowel locates the vacuum drilling (4, in Fig. 3 and 4) in the carburettor body (31) and the secondary throttle operating unit body (83). There is a small restriction drilling through this dowel that must be clear before the secondary throttle operating unit can function correctly.
6. The lever (51) and items (55) to (49) must be assembled to the primary throttle spindle in the order shown in Fig. 14.
7. THE LEVER (51) MUST BE ASSEMBLED SO THAT ITS OUTER END COMES BELOW ITS ROLLER CONTACT ON THE SECONDARY THROTTLE SHAFT LEVER as shown in Fig. 10.

CARBURETTOR

TYPE — STROMBERG CD

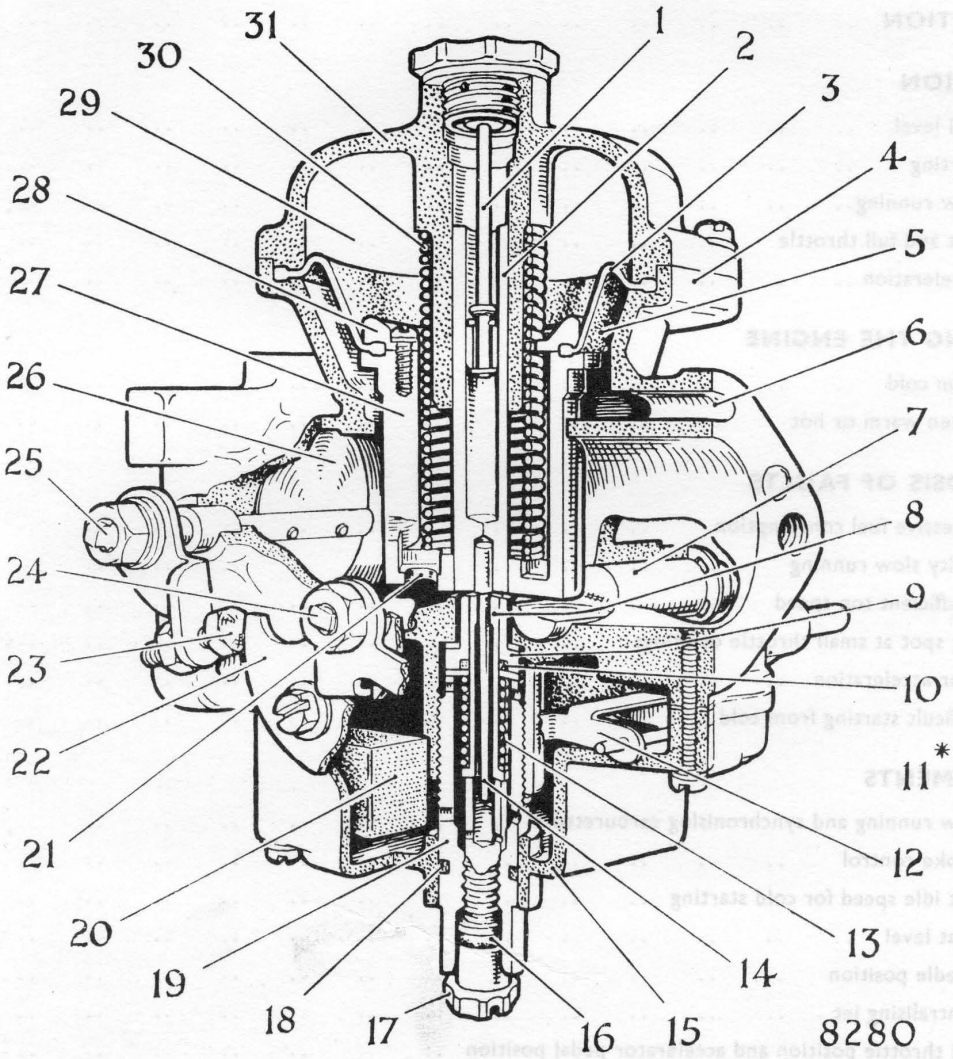

Fig. 1. *Stromberg 150 CD carburettor — part sectional view*

Key to Figs. 1—8

1. AIR VALVE HYDRAULIC DAMPER
2. GUIDE SPINDLE FOR AIR VALVE 27
3. DIAPHRAGM
4. CARBURETTOR BODY
5. AIR CHAMBER BELOW DIAPHRAGM
6. AIR FEED HOLD TO 5
7. STARTER BAR
8. JET
9. CENTRALISING BUSH
10. "O" RING
11. FLOAT NEEDLE AND SEATING—NOT SHOWN—SEE FIG. 3
12. FLOAT FULCRUM
13. JET SPRING
14. METERING NEEDLE
15. FLOAT CHAMBER
16. "O" RING
17. JET ADJUSTMENT
18. "O" RING
19. JET BUSH RETAINING SCREW
20. FLOAT
21. DEPRESSION TRANSFER HOLE (ONE SHOWN)
22. FAST IDLE CAM
23. FAST IDLE ADJUSTMENT
24. STARTER BAR SHAFT
25. THROTTLE SHAFT
26. THROTTLE VALVE
27. AIR VALVE
28. RETAINING RING FOR DIAPHRAGM
29. DEPRESSION CHAMBER ABOVE DIAPHRAGM
30. AIR VALVE RETURN SPRING
31. DEPRESSION CHAMBER COVER

STROMBERG CD CARBURETTOR

DESCRIPTION — See Figs. 1 and 2

The Stromberg carburettor suffix letters CD, denote that it is a constant depression type of carburettor. This principle of operation, sometimes referred to as constant vacuum, uses a variable choke and a needle of suitable profile moving in a single jet, to provide the fuel air mixture needed to meet all conditions of engine operation. Part sectional and external views of this carburettor are shown in Figs. 1 and 2. The principal parts of the carburettor are: the main body (4) containing the throttle (26), the float chamber (15), and the depression or vacuum chamber (29).

The float chamber (15) is situated around the jet bush retaining screw (19). The float (20) is made from a synthetic rubber and being solid, it cannot puncture.

While the engine is stationary the air valve piston (27) rests on the carburettor body as shown in Fig. 1.

When the choke control is pulled out, the cam (22) partly rotates and opens the throttle (26) to the correct position for cold starting. It also turns the starting bar (7) which lifts the air valve piston (27) and needle (14) so that the discharge area of the jet annulus between the jet (8) and needle (14) is enlarged to give the correct amount of mixture enrichment for cold starting.

Directly the engine starts the air valve piston (27) is lifted by air pressure to a position dependent upon the amount of throttle opening.

At idling speed the air valve piston (27) is raised by air pressure a small distance from the carburettor body. The jet (8) to needle (14) annulus area is then set by the jet adjustment (17) so that in conjunction with the throttle slow running setting, correct idling is obtained.

Above idling speed, the needle (14) and piston (27) are raised by air pressure acting on the underside of the diaphragm (3) above which a lower pressure exists, due to PARTIAL transference of inlet manifold vacuum to the depression chamber as the throttle is opened. Opening the throttle raises the piston and closing the throttle lowers the piston. This action gives the required fuel/air ratio and at the same time maintains an almost constant air speed over the jet orifice where the needle (14) enters the jet (8). This ensures good atomisation of the fuel as it leaves the jet annulus.

A light compression spring (30) assists to return the piston when the depression above the diaphragm (3) is reduced, as the throttle is closed.

The hydraulic damper (1) in the piston guide (2) prevents sudden rising of the air valve piston (27) when the throttle

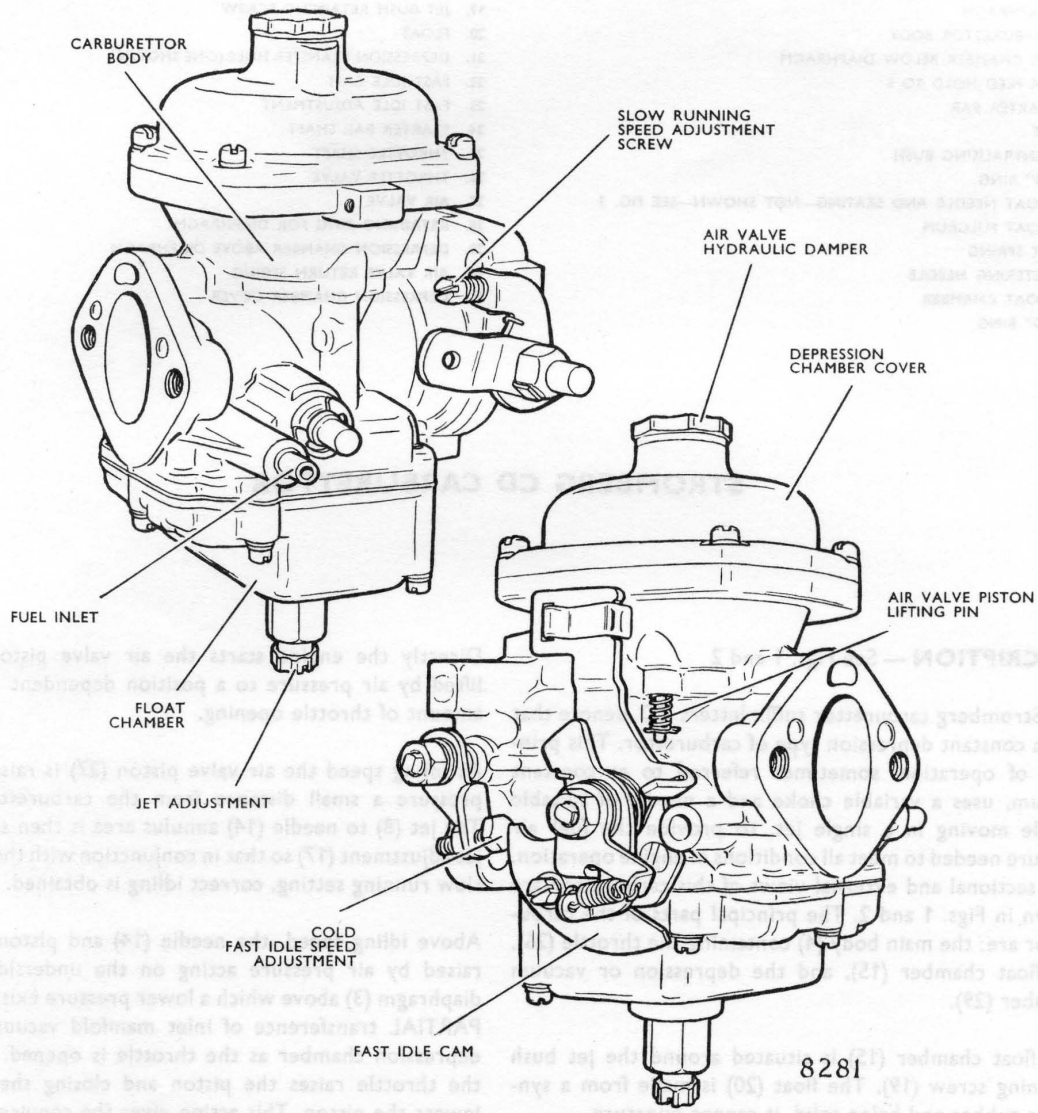

Fig. 2. *Stromberg 150 CD carburettor — external views*

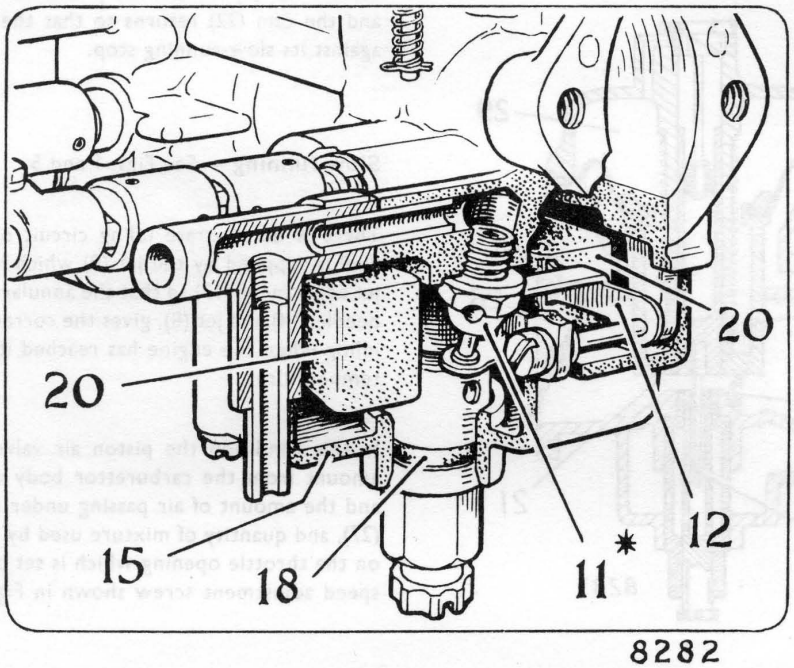

Fig. 3. *Float chamber — internal view*

is opened quickly for acceleration. This action gives the temporary enrichment needed during acceleration.

The flexible diaphragm (3) is clamped between the depression chamber cover (31) and air valve piston (27) upper end. It provides the means needed to give an air seal between the air valve piston and depression chamber and locates the air piston correctly.

In this particular application, where two carburettors are used, the throttles are coupled together with a universal coupling type of linkage that allows both throttles to open together.

OPERATION

Fuel level — See Figs. 1 and 3

The flow of fuel into the float chamber is controlled by the needle valve (11) which is closed by the float (20) when the fuel rises to its correct level. As the fuel level falls the float lowers and the needle valve admits fuel until the correct level is again reached.

The float chamber is air vented externally through a drilling to a hole leading to atmosphere behind the air intake flange. Fuel reaches the jet (8) through a drilling in the jet assembly securing screw (19).

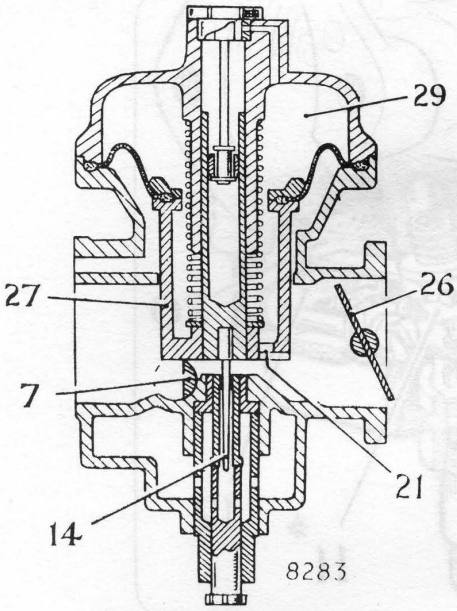

Fig. 4. *Starting operation*

Starting — See Figs. 1 and 4

Cold starting conditions require a very rich mixture for the first few seconds of running and a means of weakening the mixture progressively as the engine warms up. Correct throttle opening to the fast idle position is also necessary to prevent the engine from stalling after it fires. These conditions are met by the starter bar (7) raising the air valve piston (27) and needle (14) to increase the jet discharge area, and the cam (22) opening the throttle to the fast idle position, when the choke control is pulled out. Rotation of the starter bar (7) also restricts the air flow and increases the depression at the jet annulus.

Directly the engine starts inlet manifold depression rises. Some of this depression passes through the throttle opening and the two holes (21) in the lower end of the piston air valve (27) to the depression chamber (29). Air pressure then raises the air valve piston (27) far enough to give the air flow needed to prevent the engine from stalling.

As the engine warms up, and the choke is pushed in, the starter bar (7) lowers the piston to its normal position and the cam (22) returns so that the throttle can come against its slow-running stop.

Slow running — See Figs. 1 and 5

There is no separate idling circuit on this carburettor. Fuel is supplied by the jet (8) which is positioned by the jet adjustment (17) so that the annular space, between the needle (14) and jet (8), gives the correct fuel discharge for idling when the engine has reached its normal operating temperature.

In this condition the piston air valve (27) rises a small amount from the carburettor body as shown in Fig. 5, and the amount of air passing under the air valve piston (27), and quantity of mixture used by the engine depends on the throttle opening which is set by the slow running speed adjustment screw shown in Fig. 2.

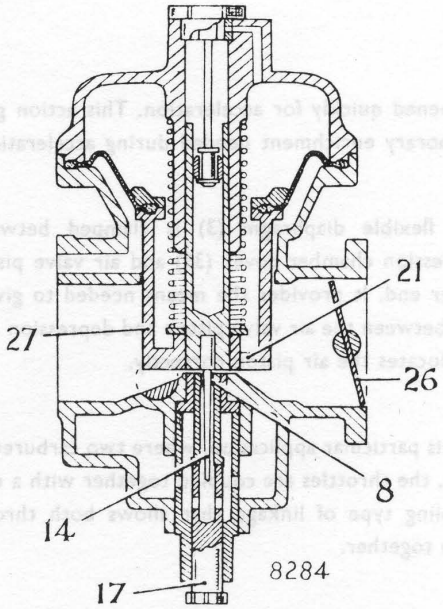

Fig. 5. *Slow running operation*

Part and full throttle driving — See Figs. 1, 6, 7 and 8

When the throttle is opened the air valve piston (27) and needle (14) rise with increase of engine speed to allow the supply of an increased quantity of fuel/air mixture to meet engine requirements.

Air flow is controlled by the throttle, and the air valve piston (27) which acts as a variable choke. Fuel metering is controlled by the varying diameters of the needle (14) which controls the annular discharge area of the jet to give the amount of fuel needed for any position taken by the air valve piston (27), as it rises and falls with increasing or decreasing engine speed.

Whenever the air flow under the air valve piston (27) reaches a certain speed a low enough depression is created above the diaphragm (3), through the two holes (21), for atmospheric pressure; acting on the underside of the diaphragm, to lift the air valve piston assembly so that it "floats" on air pressure.

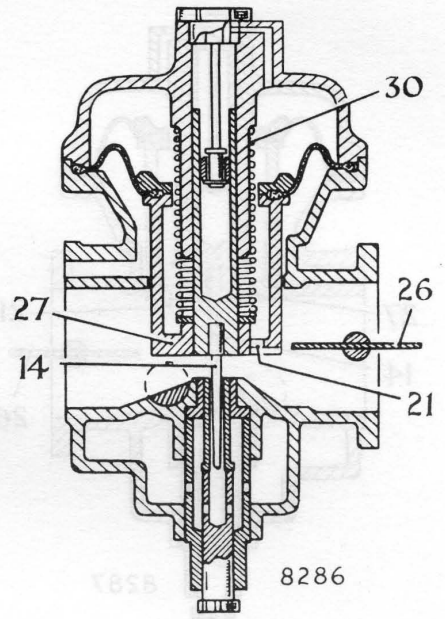

Fig. 7. *Full throttle operation — low engine speed*

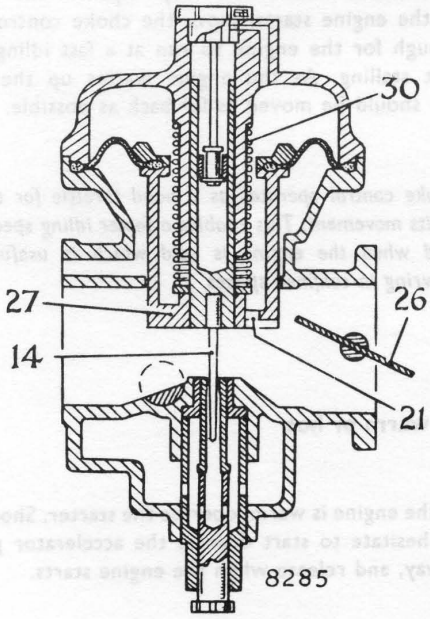

Fig. 6. *Part throttle operation — moderate engine speeds*

When the throttle is opened from the idling position, some inlet manifold depression passes to the carburettor side of the throttle. This raises the air speed under the air valve piston (27) to the point when it creates the necessary depression above the diaphragm (3) for air pressure acting on the underside of the diaphragm, to lift the air valve piston assembly a small amount. The piston ceases to rise when the air speed below the piston just maintains the depression needed above the diaphragm for the air valve piston assembly to "float" on air pressure.

When the throttle is moved open further air speed under the air valve piston (27) and depression above the diaphragm (3) are increased as THE ENGINE SPEED INCREASES, causing the air valve piston to lift until the air pressure and depression again stabilise so that the piston "floats" in a higher position.

Further movement of the throttle to its fully open position causes the air valve piston to rise by the same means as

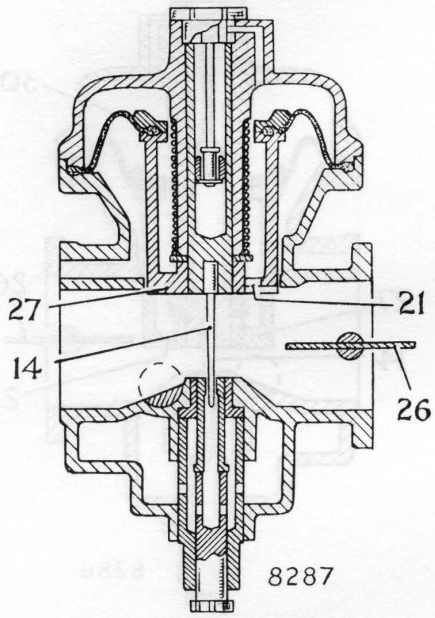

Fig. 8. *Full throttle operation — high engine speed*

before, and to "float" in its, maximum lift position shown in Fig. 8 IF THE ENGINE SPEED CONTINUES TO RISE. Figs. 6, 7 and 8 show the approximate positions taken by the air valve piston (27) for part throttle opening at moderate engine speed, full throttle opening at low engine speed, and full throttle opening at high engine speed. From these illustrations it can be seen that the air valve piston position is dependent upon the amount (weight) of air that the engine can draw through the throttle opening, and that a high air speed and almost constant depression will always exist at the fuel discharge annulus where the needle enters the jet.

The air valve piston movement is also controlled slightly by the compression spring (30). This spring is identified from the details given under "Fuel System" in the Data Section. If replaced an exactly similar spring must be fitted.

Acceleration — See Fig. 1

When the throttle is opened suddenly at low speeds the sudden inrush of air can immediately weaken the mixture. This is overcome by damping the upward movement of the air valve piston so that there is a temporary increase of fuel discharge from the jet (8) due to the increase of depression existing on the jet, while the air valve piston movement is controlled by the hydraulic damper (1) action. When the piston reaches the position given by air pressure lift against the depression in the depression chamber, the jet (8) discharge returns to normal. Downward movement of the piston is not restricted by the action of the hydraulic damper.

STARTING THE ENGINE

From cold

Pull the choke control out fully. Operate the starter. When the engine starts, move the choke control back, far enough for the engine to run at a fast idling speed without stalling. As the engine warms up the choke control should be moved as far back as possible.

The choke control operates as a hand throttle for the first part of its movement. This enables a faster idling speed to be obtained when the engine is cold which is useful when manoeuvring in confined spaces.

When warm or hot

When the engine is warm, operate the starter. Should the engine hesitate to start depress the accelerator pedal a short way, and release when the engine starts.

If the engine is difficult to start when hot, fully depress the accelerator while operating the starter, and release it directly the engine starts.

DIAGNOSIS OF FAULTS

The carburettor cannot function correctly if the ignition system, fuel supply, or engine condition are at fault.

Unless known to be in perfect condition the following items should be checked before making any adjustments, or concluding that the carburettor is not operating correctly.

If after making the following checks, the carburettor is proved to be faulty the possible cause, or causes, will be found under the headings "Excessive Fuel Consumption" and onwards.

Ignition system

Check spark plugs. Clean and set gaps.

Check condition and tightness of H.T. and L.T. leads.

Check condition and setting of contact breaker points, and moving contact point spring tension.

Ensure that the centrifugal and vacuum advance mechanisms are working correctly.

Fuel system

Ensure that an adequate supply of fuel is being delivered to the float chamber.

Check that the crankcase regulator valve in the inlet manifold is operating correctly. See Section B index.

Check that fuel pump output pressure is correct to the figures given under "Fuel System" in the Data Section of the Manual.

Examine induction manifold and carburettor flanges for air leaks.

Ensure that the air cleaners are fitted correctly and not restricting the air supply to the carburettor due to the element being dirty.

Compression

Check valve clearances and compression pressures.

Make sure valves are not sticking.

Exhaust system

Check that the exhaust system has not become damaged or blocked.

Excessive fuel consumption — See Fig. 1

1. Ensure that the complaint is genuine and not caused by heavy traffic conditions or other adverse operating conditions.

2. Check that each carburettor air valve piston (27) falls freely when lifted to its full extent and then allowed to fall. Each piston should require a noticeable effort to lift it against the action of its hydraulic damper (1) and should fall with a distinct "tap" sound onto the carburettor body.

3. Check that the slow running is correctly set by raising each piston with its lifting pin one piston at a time, without opening the throttles while the engine is running. The lifting pin is shown in Figs. 2 and 9. When this is done the engine speed should fall slightly. Incorrect adjustment of the slow running on one or both carburettors will affect the whole range of fuel metering by the jet(s) and needle(s).

4. If suspect, check that the correct needles are fitted. If either needle or jet shows signs of wear they should be renewed. The needle reference designation is given in the Data Section under "Fuel System".

5. Check the entire system for fuel leaks, particularly between the float chamber and centralising bolt, and between this bolt and the jet adjustment. "O" rings (18) and (16) are used between those items.

6. Check that fuel is not flooding over from the top of the jet due to a fault or dirt in the needle valve and seat, or incorrect adjustment of the float position.

7. Check the "O" ring (10) between the jet (8) and jet bushing (9) is not missing and that it makes a good seal between these items.

8. Check that the diaphragm (3) is not damaged and that it is correctly fitted at its inner and outer edges.

Faulty slow running

1. Check that either air valve piston is not sticking and that each piston falls with a decided "tap" onto the carburettor body.

2. Check operation of crankcase regulator valve. See Section B, Index and (5) Fig. 9.

3. Make sure that flooding is not occurring in either carburettor.

4. Adjust the slow running and synchronise the carburettors as described under "ADJUSTMENTS".

Insufficient top speed — See Fig. 1

1. Check that the throttles are opening fully when the accelerator pedal is fully depressed by a person sitting in the driver's seat.

2. Check that both air valve pistons (27) move freely to the full extent of their travel, and that their needles (14) are correctly positioned in the pistons. The needle shoulder should be flush with the bottom of the piston.

3. Check condition of each diaphragm (3). If this item is defective or not fitted correctly it will allow air leakage into the depression chamber (29) and this will prevent the air valve piston and needle from rising correctly as the throttle is partly or fully opened.

4. Ensure that the correct needles are fitted, as specified in the Data Section under "Fuel System".

Flat spot at small throttle opening

1. Check that the slow running adjustment is not too weak and that the carburettors are correctly synchronised.

2. Check that the vacuum advance pipe system, and diaphragm in the distributor vacuum advance are free from air leaks. Should an air leak exist in the vacuum advance system the normal fuel/air mixture ratio will be weakened by extra air as the engine speed is increased from idling.

Poor acceleration — See Fig. 1

1. Check that the piston spindle bore, in which the hydraulic damper operates is filled with clean engine oil. Very low viscosity oils such as 5W/20 must not be used for this purpose.

2. After filling with clean engine oil check that the air valve piston (27) offers resistance to upward movement when lifted with a finger.

Difficult starting from cold — See Fig. 2

1. Check that control is moving the cam on the end of the starting shaft over the whole of its operating range, when the control is pulled out fully.

2. Check that the throttle is being opened to its fast idle position when the choke control is pulled fully out. See "Fast idle speed for cold starting" under "ADJUSTMENTS".

3. Check that the needles (14) are positioned correctly in the piston (27). See "Needle position" under ADJUSTMENTS.

ADJUSTMENTS

Slow running and synchronising carburettors — See Fig. 9

When correctly adjusted and synchronised each carburettor will provide the same amount of fuel air mixture. When making these adjustments the following procedure should be carried out:

1. Loosen off the clamping bolt (4) on the throttle coupling close to the front carburettor.

2. Check that shoulders of both needles (14) are flush with the lower faces of the air valves (27). See Fig. 12.

3. Screw up each jet adjusting screw (6) until each jet just makes contact with the lower side of the piston WITHOUT RAISING THE PISTON, and then screw back each adjustment two and a quarter turns.

4. Slacken off both throttle slow running speed adjustment screws (3) until their ends are clear of the

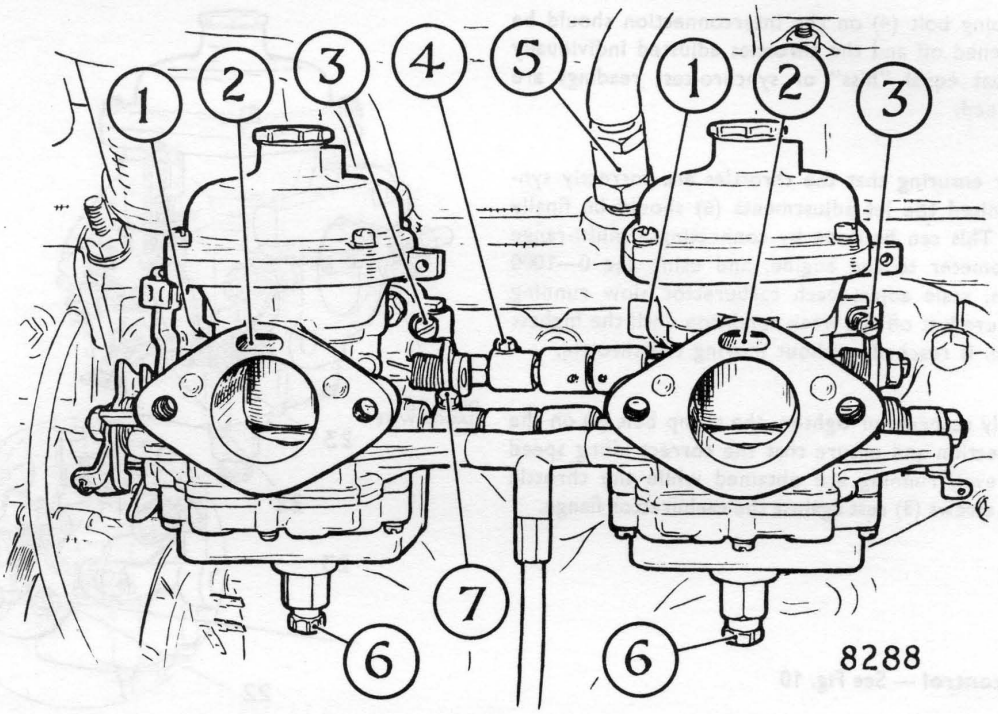

1. AIR VALVE PISTON LIFTING PINS
2. AIR FEED PORTS TO UNDERSIDES OF DIAPHRAGMS
3. SLOW RUNNING SPEED ADJUSTMENT SCREWS
4. CLAMPING BOLT—ON COUPLING FOR THROTTLES
5. CRANKCASE VENTILATION VALVE
6. ADJUSTMENTS FOR JETS
7. CLAMPING BOLT—ON COUPLING FOR STARTER BARS

Fig. 9. *Throttle synchronisation and jet adjustments*

carburettor flanges when each throttle is held closed. Rotate each screw (3) clockwise until a ·002 in. (·05 mm.) feeler, or a narrow strip of thin paper, is lightly gripped between the screw ends and carburettor flanges, as the throttles are held closed.

From these positions rotate each screw two turns clockwise to open each throttle by an EQUAL amount.

5. Tighten the clamping bolt (4).

6. Run the engine until it reaches its proper running temperature.

7. Adjust the engine slow running mixture with the adjustments (6) so that the engine idles evenly and each slow running speed adjusting screw (3) an equal amount so that the correct idling speed is obtained. This speed is given in the Data Section under "Fuel System". Upward, or clockwise movement of the adjustment (6) weakens the mixture, and downward movement richens the mixture.

8. Check the throttle synchronisation by listening at each carburettor inlet with a suitable length of rubber hose. Each carburettor should give a similar "hiss" when the engine is idling.

Throttle synchronisation can also be checked with a Crypton B.91 synchro test instrument provided that the instrument rubber sealing face does not obstruct the air ports (2) shown in Fig. 9. To do this the rubber sealing face can be cut away so that a seal is not made between the bottom of the port (2) and the instrument adjustable intake as all air passing into the port (2) must pass through the instrument intake.

If the throttle synchronisation (balance) setting is found to be incorrect by either of these tests the

clamping bolt (4) on the interconnection should be slackened off and the throttles adjusted individually so that equal "hiss" or synchro-test readings are obtained.

9. After ensuring that the throttles are correctly synchronised the jet adjustments (6) should be finally set. This can be done by connecting a multi-range tachometer to the engine, and using the 0—1000 r.p.m. scale adjust each carburettor slow running mixture just off the weak condition until the highest r.p.m. is reached, without moving the throttle.

10. Finally recheck, or tighten, the clamp bolt (4) on the connection and ensure that the correct idling speed and even running are obtained while the throttle stop screws (3) rest against the carburettor flange.

Choke control — See Fig. 10

The choke control securing set screw, on the cam (22) should be tightened when the choke control is about $\frac{1}{8}$ in. (3 mm.) from its normal fully back position. This ensures that the cam (22) rests against its stop when the control is moved fully back.

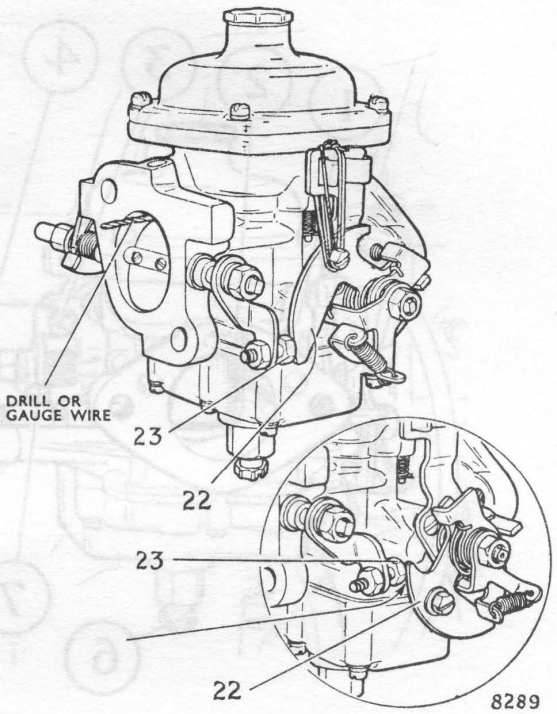

Fig. 10. *Setting throttle gap for cold starting*

Fast idle speed for cold starting

This adjustment ensures that the engine runs up to a suitable speed, directly it fires, when the choke control is pulled out fully.

The correct fast idle throttle opening clearance is given in the General Data Section under "Fuel System", and has been obtained by actual cold room starting tests. This amount of opening must be obtained when making this adjustment to overcome a complaint of difficult cold starting under adverse operating conditions.

Two methods of adjustment are possible and either method is carried out on the front carburettor only, as the throttles and starter bars of both carburettors are interconnected.

Method 1 With carburettors on engine — See Fig. 10 inset

1. Remove air cleaners from the carburettors.
2. Ensure that the carburettors are properly synchronised and that the slow running is correctly set, with the choke control in its fully back position.
3. With the choke control in this position, adjust the bolt (23) so that there is a clearance of 02-·03 ins. (·5-·7 mm.) between the bolt head and cam (22) when the bolt lock nut is tightened.
4. Check, and, if necessary, adjust the interconnection between the starter bars so that each air valve piston is lifted an equal amount when the choke lever is pulled out as far as possible.
5. Refit air cleaners.

Method 2 With front carburettor removed from engine — See Fig. 10

1. Refer to "Fuel System" in Data Section to obtain the fast idle throttle setting. Insert a drill shank or a wire of this diameter, or flattened to this dimension, between the throttle edge and throttle bore at right angles to the centre of the throttle spindle. Hold the throttle closed against this gauge.

2. Tie the fast idle cam in the position shown in Fig. 10 and adjust the bolt head (23) to just contact the cam (22) and then tighten the bolt locknut.

Float level — See Fig. 11

This check or adjustment is only needed if flooding or excessive fuel consumption occur.

The highest points of the carburettor floats should be 19-20 mm. above the main body face when the carburettor is in an inverted position.

If the float level needs correction the float arm extension, that contacts the float needle, can be carefully bent. Small corrections can also be made by putting an extra washer under the needle seating.

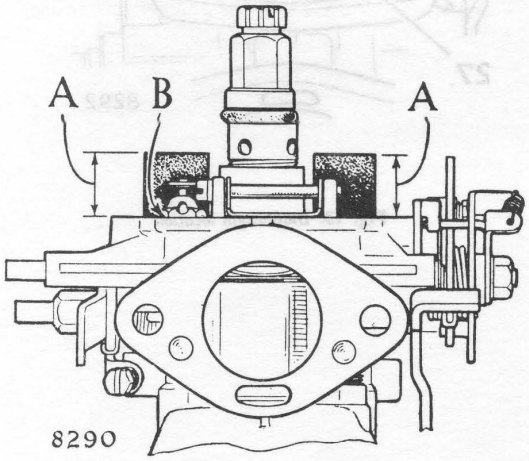

A 19—20 mm.

B FLOAT NEEDLE VALVE AND SEAT

Fig. 11. *Float setting dimension position*

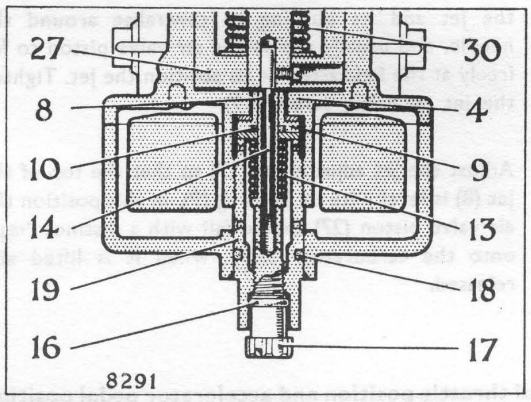

Fig. 12. *Jet centralisation details*

Needle position — See Fig. 12

As shown in Fig. 12 the needle (14) shoulder should be level with the air valve piston (27) lower face.

Centralising jet — See Fig. 12

The jet is correctly centralised to the needle if the air valve piston will fall freely with a distinct "tap" onto the carburettor body when the jet is flush with its brass bushing. The jet is correctly centralised during the production assembly of the carburettor and further adjustment is not required normally.

The jet (8) will require re-centralising if it is removed for any reason, and this should be done in the following manner with the carburettor in position.

1. Check that the needle shoulder is flush with the underside of the air valve piston.

2. Slacken the jet bushing retaining screw (19) three flats (half a turn) with a ¾ in. A.F. spanner.

3. Screw up the jet adjustment screw (17) as far as possible.

4. Give the retaining screw (19) a sharp tap, with the spanner head, on one of its hexagon sides. This assists

the jet and its bushing to centralise around the needle, and usually allows the air valve piston to fall freely at the first attempt to position the jet. Tighten the jet retaining screw (19).

5. Adjust the jet adjustment (17) so that the top of the jet (8) is level with its bushing (9). In this position the air valve piston (27) should fall with a distinct "tap" onto the carburettor body, when it is lifted and released.

Full throttle position and accelerator pedal position

An adjustment for setting the accelerator pedal is provided at the lever on the rear end of the throttle operating shaft above the carburettors, where a rod connects this lever to the lever on the end of the accelerator pedal shaft.

This adjustment set screw should be tightened when the throttles are fully open with the accelerator pedal 1 in. (25 mm.) from the floor covering.

SERVICING

The following information is given for general guidance. A fully exploded view is shown in Fig. 14.

Hydraulic damper — See Fig. 1

The air valve piston spindle bore (2) in which the damper (1) fits should be filled with clean engine oil. Very low viscosity oils such as 5W/20 must not be used for this purpose.

When acting correctly the hydraulic damper should cause the air valve piston to offer resistance to upward movement when lifted with a finger. On the downward movement the air valve piston should fall freely without any resistance.

If the hydraulic damper does not function correctly after cleaning out the air valve piston spindle bore, cleaning the damper and refilling with the correct grade of oil, it should be replaced.

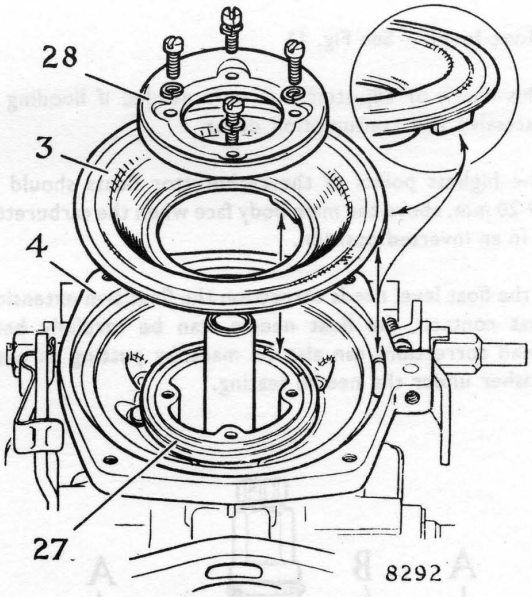

Fig. 13. *Diaphragm location*

Diaphragm — to renew — See Fig. 13

The diaphragm (3) can be renewed without removing the carburettor(s) from the engine by removing the depression chamber cover screws and cover, lifting out the air valve piston, and removing the screws holding the diaphragm retaining ring (28) to the air valve piston.

When fitting the new diaphragm its locating tabs must locate in the locating positions provided in the carburettor body and air valve piston upper end. These positions are shown by arrowheads in Fig. 13.

The diaphragm retaining ring requires very careful replacement because it is easy to misplace the diaphragm from its correct position on the air valve piston.

Air valve piston return spring — See Fig. 1

This spring (30) must not be stretched or shortened. Its details are given in the Data Section under "Fuel System". If replaced, an exactly similar spring must be fitted. No washer is fitted below the spring inside the piston (27).

Dismantling for cleaning — See Fig. 1

The following procedure can be carried out with the carburettor on or off the engine:

1. Remove the six screws holding the float chamber to the carburettor main body, and remove the float chamber by drawing it down the jet bushing retaining screw. Because of the "O" ring (18) fit this can be rather difficult.

2. Remove the jet adjusting screw (17).

3. Remove the hydraulic damper (1) and the depression chamber cover (31).

4. Lift out the air valve piston, needle and diaphragm assembly.

There is no need to remove the jet bush retaining screw (19) when cleaning only is required.

Cleaning

Fuel, or paraffin (kerosene), ONLY, should be used for cleaning the carburettor parts. NOTHING ELSE can be used. Certain cleaning and degreasing fluids will ruin the diaphragm and "O" rings.

The jet, and the space inside the jet bush retaining screw should be blown out with clean compressed air.

Reassembly after cleaning — See Figs. 13 and 14

This is a reversal of the dismantling procedure. If necessary the float chamber joint (23) and "O" ring (33) should be renewed.

When refitting the diaphragm and air valve piston the locating lip on the diaphragm must fit in the corresponding locating recess in the carburettor body.

As the jet adjusting screw was removed it will be necesasry to reset the slow running and check the synchronisation of the carburettors.

Removal

Remove the two air cleaners.

Disconnect fuel pipe from carburettors.

Disconnect choke control inner and outer cable and throttle operating rod from the front carburettor.

Loosen off the interconnecting shaft clamp bolts (4) and (7) shown in Fig. 9.

Remove two carburettor flange fixing nuts on each carburettor. Lift off carburettors together and then draw apart from the throttle and starter bar interconnecting shafts.

continued on page 62

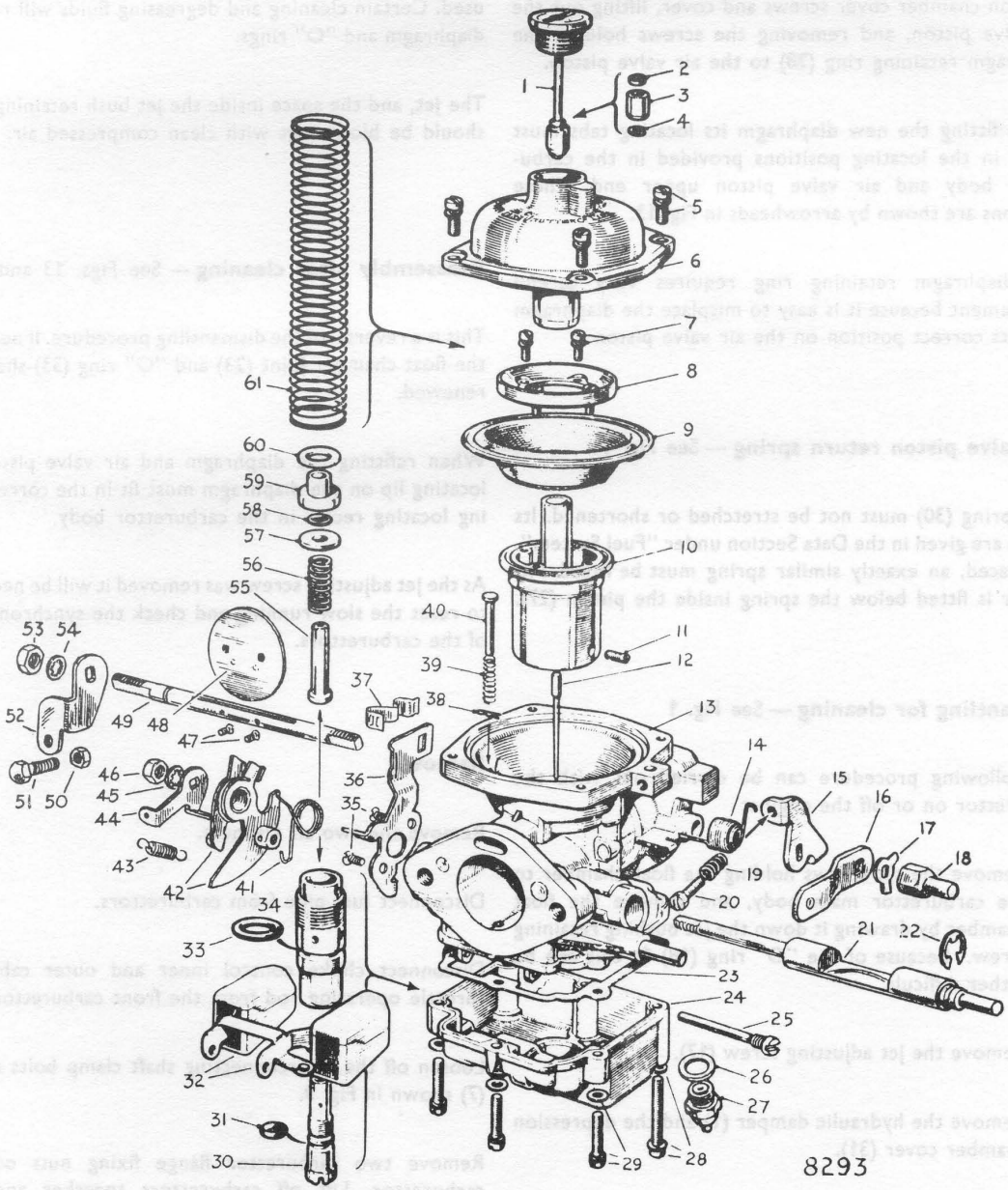

Fig. 14. *Stromberg 150 carburettor — exploded view*

CARBURETTOR PARTS — See Fig. 14

1. AIR VALVE PISTON DAMPER ASSEMBLY
2. WASHER FOR DAMPER
3. BUSHING FOR DAMPER
4. RETAINING RING FOR DAMPER
5. SCREW AND SPRING WASHER
6. SUCTION CHAMBER COVER
7. DIAPHRAGM RETAINING RING SCREWS AND SPRING WASHERS
8. DIAPHRAGM RETAINING RING
9. DIAPHRAGM
10. AIR VALVE PISTON AND SHAFT
11. LOCKING SCREW FOR METERING NEEDLE
12. METERING NEEDLE
13. CARBURETTOR MAIN BODY
14. THROTTLE RETURN SPRING
15. THROTTLE STOP LEVER
16. THROTTLE LEVER
17. LOCKING WASHER
18. NUT FOR THROTTLE LEVER
19. THROTTLE STOP SCREW SPRING
20. THROTTLE STOP SCREW
21. STARTER BAR
22. RETAINING RING FOR STARTER BAR
23. GASKET FOR FLOAT CHAMBER
24. FLOAT CHAMBER
25. FLOAT FULCRUM PIN
26. WASHER FOR NEEDLE SEATING
27. FLOAT NEEDLE VALVE AND SEATING
28. SCREW AND SPRING WASHER—LONG, THREE USED
29. SCREW AND SPRING WASHER—SHORT, THREE USED
30. JET ADJUSTMENT
31. "O" FOR JET ADJUSTMENT
32. FLOAT ASSEMBLY
33. "O" RING FOR BUSHING RETAINING SCREW
34. BUSHING RETAINING SCREW
35. COUNTERSINK SCREWS HOLDING CHOKE CABLE BRACKET
36. CHOKE CABLE BRACKET
37. CHOKE CABLE RETAINING CLIP
38. SPRING RETAINER FOR AIR VALVE LIFTING PIN
39. SPRING FOR AIR VALVE LIFTING PIN
40. AIR VALVE LIFTING PIN
41. FAST IDLE CAM RETURN SPRING
42. FAST IDLE CAM AND LEVER ASSEMBLY
43. SPRING
44. STARTER BAR OPERATING LEVER
45. LOCK WASHER
46. NUT
47. THROTTLE FIXING SCREWS
48. THROTTLE
49. THROTTLE SPINDLE
50. LOCK NUT FOR FAST IDLE SCREW
51. FAST IDLE ADJUSTMENT SCREW
52. FAST IDLE LEVER—ON THROTTLE SPINDLE
53. NUT
54. LOCK WASHER
55. JET
56. JET SPRING
57. WASHER BELOW JET "O" RING
58. "O" RING—JET
59. BUSHING FOR JET
60. BUSHING WASHER
61. AIR VALVE RETURN SPRING

Refitting

Refitting the carburettors is a reversal of the removal procedure.

After refitting, the starter bar coupling clamps should be set so that the air valve pistons are raised by an equal amount when the choke control is pulled out. Also the throttles should be synchronised and the slow running adjusted as described on page 54.

Check that the air valve spindle is full of clean engine oil to ensure correct action of damper. See "Hydraulic damper" under SERVICING.

AIR CLEANERS

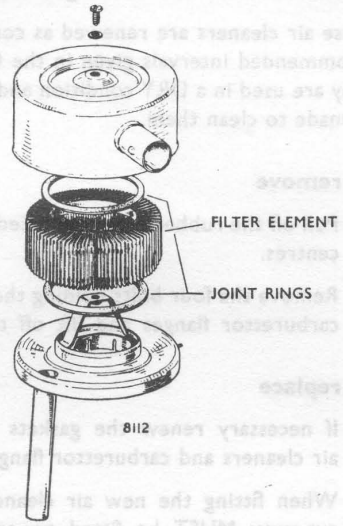

Fig. 1. *Air cleaner—circular element type*

AIR CLEANER USED WITH ZENITH IV CARBURETTOR — See Fig. 1

THE FILTER ELEMENT IS USED DRY. IT MUST NOT BE OILED OR WASHED IN ANY FLUID. It should be renewed at the recommended intervals given in the Owner's Handbook.

To remove filter element

1. Remove cover retaining screw and lift off top cover.
2. Lift off the filter element.

To fit new filter element

1. Clean out the top cover and bottom mounting plate making sure that no dirt enters the carburettor air intake.
2. Check that the joint rings used above and below the element are in good condition, and positioned correctly around their locations inside the filter cover and filter base.
3. Place the filter element in position on the filter base plate and refit the top cover and its retaining screw.

AIR CLEANER USED WITH SOLEX P.A.I.A.S. CARBURETTOR — See Fig. 2

The replaceable pad type element for this type of filter is supplied in an oil wetted condition, inside a sealed plastic bag. No attempt should be made to clean either a new or used element and they must not be further wetted with any kind of fluid.

The element should be renewed at the recommended intervals given in the Owner's Handbook.

To remove filter element

1. Release the six spring clips holding the upper and lower housing of the unit together.
2. Remove the four wing nuts, spring washers and flat washers holding the carburettor end of the upper body to the carburettor and lift off upper body.
3. Remove existing fibre element and discard.
4. Clean out the upper and lower housings ensuring that nothing enters the carburettor intake.

To fit new filter element

1. Remove new element from its plastic bag and place it in position, making certain that its sealing bead is located in the lip of the air cleaner base, and that the SMOOTH side of the element is facing upwards.
2. Refit the air cleaner cover so that it is correctly located over the element sealing band, and refasten the six spring clips.

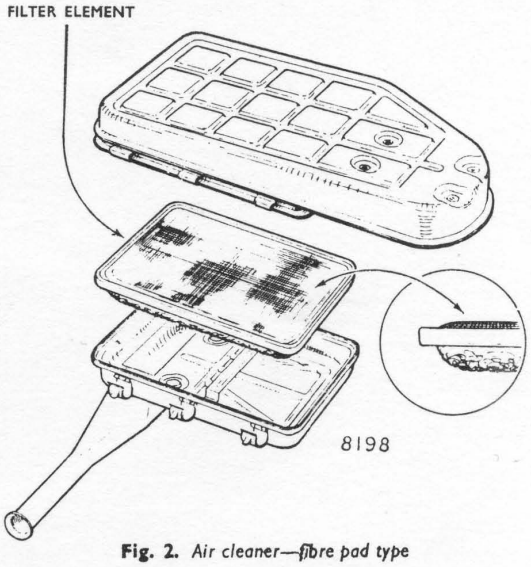

Fig. 2. *Air cleaner—fibre pad type*

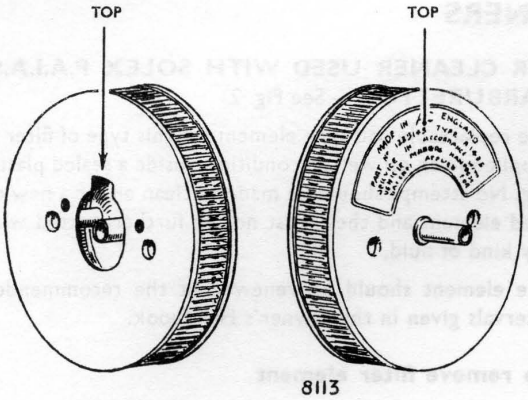

Fig. 3. *Air cleaner—disposable type*

3. Check that the rubber joint is in position on the carburettor top face.

4. Refit the four wing nuts, spring washers and flat washers holding the unit to the carburettor intake. Tighten the four wing nuts by hand only.

AIR CLEANERS USED WITH STROMBERG CD CARBURETTORS — See Fig. 3

These air cleaners are renewed as complete units at the recommended intervals given in the Owners Handbook. They are used in a DRY condition and no attempt should be made to clean them.

To remove

1. Pull off the rubber pipe connected to both air cleaner centres.

2. Remove the four bolts holding the air cleaners to the carburettor flanges and lift off the air cleaners.

To replace

1. If necessary renew the gaskets used between the air cleaners and carburettor flanges.

2. When fitting the new air cleaners or gaskets, the cut-away MUST be fitted uppermost as shown in Fig. 3. Incorrect fitting will cut off the air feed to the underside of the carburettor air valve diaphragm and thus prevent the carburettor from operating correctly.