LIGHTING AND INDICATOR SYSTEM

F700 HEADLAMPS (Fig. 31)

Models employing two separate headlamps incorporate 7 in. (17·8 cm.) diameter sealed beam light units. Each light unit is of all-glass construction with an internally aluminised glass reflector fused to the front lens.

Two filaments are contained in each unit, one for the main beam and the other for the dipped beam. These are installed with absolute care and precision before they are finally sealed in the gas-filled chamber which comprises the light unit.

The fact that the light unit is completely sealed, ensures that the reflecting surface is protected to the extent of producing continual reflective efficiency without deterioration.

In the event of headlamp failure and where the cause is not due to loose or broken connections, the fault will lie in the light unit, in which case the unit will require renewal.

Dismantling

Gently prise the front (painted) rim from its securing clip which is positioned at the lower and "peakless" half of the rim.

Remove the three cross-head screws securing the retaining rim, which are accessible on removal of the dust excluding rubber; the Sealed Beam unit can then be withdrawn and detached from the slotted connector-plug.

In certain countries where ordinary filament bulbs are retained, the procedure for removal will be almost identical to that given for a Sealed Beam unit, except that after detaching the slotted connector-plug, the bulb is removed by compressing the two ends of its spring retaining-clip so that the clip is released from the pair of securing tabs which are formed on the bulb seating-ring.

Beam adjustment (Refer to Fig. 3)

Each headlamp is provided with two adjusting screws, the adjusting screw (7) provides adjustment in the vertical plane whilst the adjusting screw (5) provides adjustment in the lateral plane.

This type of sealed headlamp is so designed that adjustment can be accurately undertaken using a spirit-level type beam setter. Three glass "aiming pads" take the form of projections moulded integrally around the outer front edge of the lamp glass, where their purpose is to provide a reference plane for beam aiming.

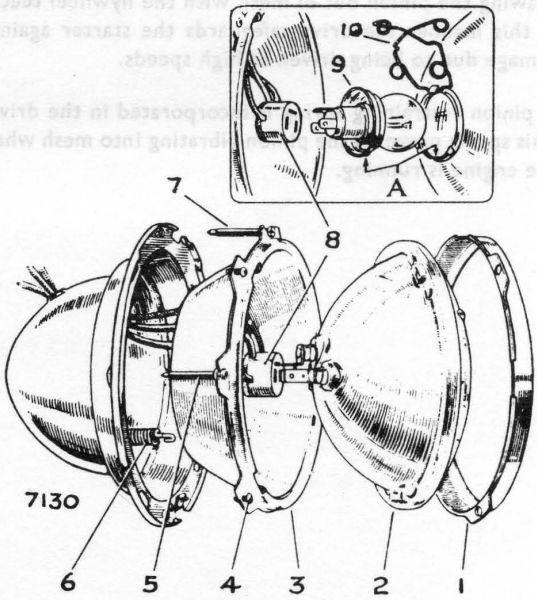

1. RETAINING RIM
2. SEALED BEAM LIGHT UNIT
3. SEATING RIM
4. RETAINING RIM SCREW
5. LATERAL ADJUSTING SCREW
6. TENSIONING SPRING
7. VERTICAL ADJUSTING SCREW
8. SLOTTED CONNECTOR PLUG
9. BULB } EUROPEAN TYPE
10. BULB RETAINER } EUROPEAN TYPE
A. LOCATION FOR BULB

Fig. 31. *F700 headlamp details*

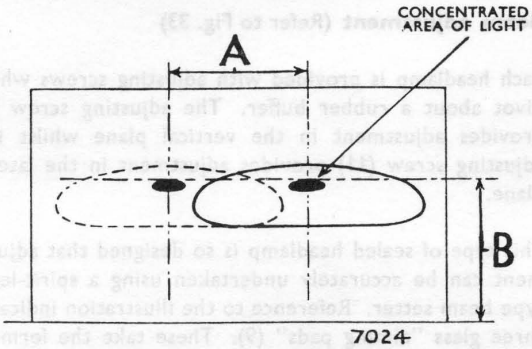

A DISTANCE BETWEEN HEADLAMPS CENTRE

B HEIGHT OF HEADLAMP ABOVE GROUND

Fig. 32. *Headlamp alignment*

It is desirable to use a reputable brand of spirit-level type beam setter if the best standards of accuracy and speed are to be obtained. Advice is available on application to the Rootes Group Development Section at Coventry, in respect of all factory approved equipment.

Should a spirit-level type beam setter not be available, the use of an optical-type beam setter can be employed, providing it is of the type (Lucas No. 571119).

If the use of neither type of beam setter is available, a fair degree of accuracy can be attained by use of an aiming board (Refer to Fig. 32).

Beam setting using the aiming board

Proceed as follows:—

1. Ensure that the car is parked (handbrake on) on level ground.
2. Ensure that the front of the car is parallel with the aiming board which is to be positioned at a distance of 25 ft. (7·62 m.) from the car.
3. Either load the car with two adults or simulate this load by adding weights to the car.
4. Clean the glass of one lamp.
5. Adjustment is to be commenced at one lamp; mask the remaining lamp.
6. Turn the adjusting screws clockwise to their full extent.
7. With the lamp illuminated in the main beam condition, turn the adjusting screws anti-clockwise as necessary until the required setting is achieved.
8. Remove the mask from the remaining lamp and mask the lamp which has been set.
9. Clean the glass of the lamp.
10. Turn the lamp adjusting screws clockwise to their full extent.
11. With the lamp illuminated in the main beam condition turn the adjusting screws anti-clockwise as necessary until the required setting is achieved.
12. Recheck the setting of both lamps.

F575 DUAL HEADLAMPS (Fig. 33)

Two pairs of headlamps are employed in this arrangement, each pair being of 5¾ in. (12·8 cm.) diameter. The inboard lamps are fitted with single main beam filaments whilst the outboard lamps are each fitted with a meeting beam filament and a supplementary main beam filament.

When full lighting is required, the inboard lamps each give 37½ watts of main beam driving light, which is supplemented by the outboard lamps providing light of similar power but directed in a fan-like shape closer to the car. Main beam driving, therefore, provides lighting with a total power of 150 watts.

Dipping the lights extinguishes the inboard lamps and dips the outboard lamps on to 50-watt filaments to provide 100 watts of carefully distributed light.

The lamp glass, reflector and filament are manufactured as a complete unit which cannot be dismantled; therefore, no attempt should be made to do so.

In the event of failure, the complete headlamp assembly must be renewed, this does not apply to vehicles in certain export territories where the outboard lamp units

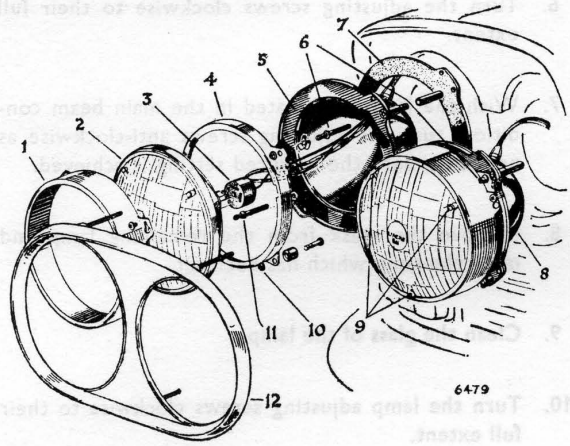

1. FRONT RIM
2. LAMP UNIT (2A)
3. ADAPTER
4. SEATING RIM
5. LAMP BODY
6. BEAM ADJUSTMENT SCREW (VERTICAL)
7. GASKET
8. LAMP BODY
9. AIMING PADS
10. RETAINING RING
11. BEAM ADJUSTMENT SCREW (LATERAL)
12. BEZEL

Fig. 33. *F575 dual headlamps—exploded view*

are fitted with pre-focus bulbs which can be renewed, in the manner described under the heading "Dismantling".

For identification purposes on home market vehicles, the outboard lamp units have the marking "2A" on the glass whilst the inboard units have "1A" marked on the glass.

Dismantling

Remove the lamp bezel retaining screws and detach the bezel from the lamps.

Slacken the three cross-head screws securing the lamp and rim and turn the rim slightly in an anti-clockwise direction which will align the larger end of the three key-hole slots, in the periphery of the rim, with the screw heads.

Release the rim and lamp unit. The lamp can be completely removed after disconnecting the wiring adaptor.

In territories where bulbs are renewable in the outboard headlamps, the bulb is removed by first compressing the two ends of the retaining spring attached at the rear of the reflector, and then withdrawing the bulb complete with its holder.

Beam adjustment (Refer to Fig. 33)

Each headlamp is provided with adjusting screws which pivot about a rubber buffer. The adjusting screw (6) provides adjustment in the vertical plane whilst the adjusting screw (11) provides adjustment in the lateral plane.

This type of sealed headlamp is so designed that adjustment can be accurately undertaken using a spirit-level type beam setter. Reference to the illustration indicates three glass "aiming pads" (9). These take the form of projections moulded integral around the outer front edge of the lamp glass where their purpose is to provide a reference plane for beam aimnig.

It is desirable to use a reputable brand of spirit-level type beam setter if the best standards of accuracy and speed are to be obtained. Advice is available on application to the Rootes Group Development Section at Coventry, in respect of all Factory approved equipment.

Should a spirit-level type beam setter not be available, the use of an optical-type beam setter can be employed providing it is of the type (Lucas No. 571119) that can be adjusted in both horizontal and vertical planes to allow No. 2A units to be set with the meeting beam 2° Down and 2° Left, and No. 1A units $\frac{1}{4}$° Down, 0° Left.

WARNING: The 2A units must NEVER be set under main beam conditions.

If the use of neither type of beam setter is available, a fair degree of accuracy can be attained by the use of aiming boards (Refer to Figs. 34 to 37) which are positioned at a distance of 25 ft. (7·62 m.) from the front of the vehicle and parallel with the rear axle—the floor being flat and level with the base of the aiming board. For 2A lamps which have renewable bulbs fitted, either the special optical-type beam setter (see above) or the aiming board method can be employed.

Using the aiming board method proceed as follows:—

1. Ensure that the car is parked (handbrake on) on level ground.

2. Ensure that the front of the car is parallel with the aiming board which is to be positioned at a distance of 25 ft. (7·62 m.) from the car.

   (V) is the vertical centre line straight ahead of the lamp centre and (H) is the horizontal centre-line which is the same height as the lamp centre.

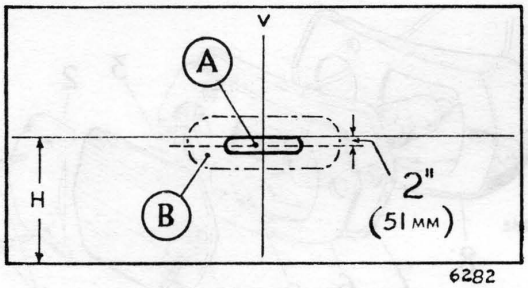

A. "HOT SPOT" B. HIGH INTENSITY ZONE

Fig. 34. *Setting diagram inner lamps*

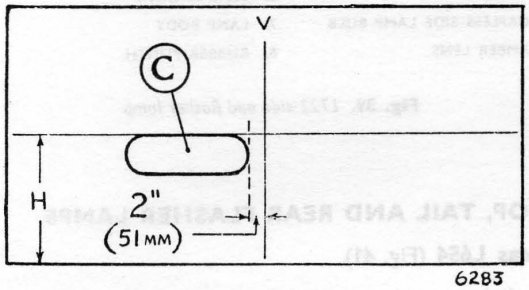

C. HIGH INTENSITY ZONE

Fig. 35. *Setting diagram outer lamps (left-hand rule of the road)*

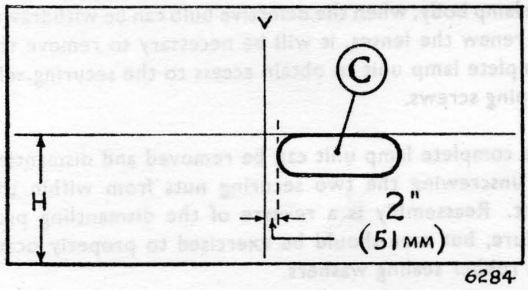

C. HIGH INTENSITY ZONE

Fig. 36. *Setting diagram outer lamps (right-hand rule of the road)*

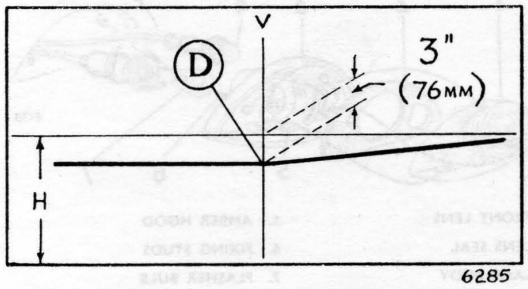

INCLINED AND HORIZONTAL PORTIONS OF BEAM TOP TO MEET AT "D"

Fig. 37. *Setting diagram outer lamps (European type vertical dip)*

3. Either load the car with two adults or simulate this load by adding weights to the car.
4. Remove the bezel from the headlamps.
5. Clean the glass of the inboard lamp.
6. Adjustment is to be commenced at one inboard lamp; mask the remaining lamps.
7. Turn the adjusting screws inwards to their full extent.
8. With the lamp illuminated in the main beam condition, turn the adjusting screws anti-clockwise as necessary until the required setting is achieved (Refer to Fig. 34).
9. Remove the mask from the adjacent outboard lamp and mask the inboard lamp.
10. Clean the glass of the outboard lamp.
11. Turn the outboard lamp adjusting screws inwards to their full extent.
12. With the lamp illuminated in the dipped condition, turn the adjusting screws anti-clockwise as necessary until the required setting is achieved (Refer to Figs. 35, 36 and 37).
13. Carefully refit the headlamp bezel without disturbing the setting.
14. Re-check the setting of both the lamps.
15. Repeat operations 3 to 14 for the remaining lamps.

F700/F575 DUAL HEADLAMPS

Two pairs of unequal diameter headlamps are employed in this arrangement. The larger outboard lamp is shown in Fig. 31 and the smaller inboard lamp distinguished by its single cable is shown in Fig. 33.

To remove the larger lamp, withdraw the bezel after removing its fixing screw, then proceed with the remainder of the dismantling procedure given for the F700 type.

To remove the smaller lamp, detach the outer grill surround and slide it from its location behind the centre grill, then proceed with the remainder of the dismantling procedure given for the F575 dual headlamps.

The electrical circuit is identical with that for the F575 dual headlamps and the beam setting procedure is also the same.

SIDE LAMPS AND FRONT FLASHER BULBS

Lucas L662 (Fig. 38)

To renew a defective bulb, remove the two screws and detach the white and amber lenses. Renew the defective bulb(s) and refit the lenses, making sure that the rubber seat is correctly located; secure the lenses with the two screws.

Lucas L722 (Fig. 39)

The servicing instructions given for the Lucas L662 also apply to this type.

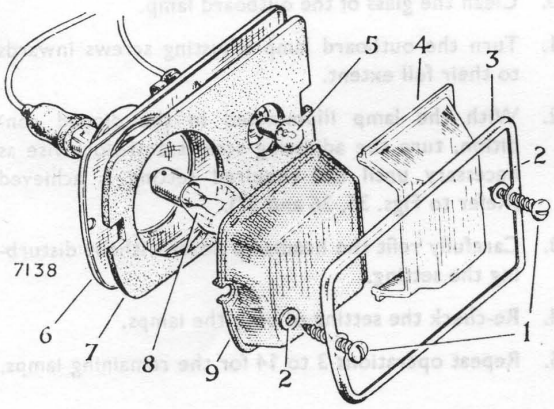

1. RETAINING RIM SCREWS
2. RUBBER WASHER
3. RETAINING RIM
4. CLEAR LENS
5. SIDE LAMP BULB
6. LAMP BODY
7. LENS SEATING
8. FLASHER BULB
9. AMBER LENS

Fig. 38. *L662 side and flasher lamp*

Lucas L756 (Fig. 40)

To renew a defective bulb, pull the particular bulb holder from the rear of the lamp unit (under the bonnet). The front lens may be removed by pressing downwards to clear the top locating lug and then easing the top of the lens outward and upward to clear the two bottom locating lugs.

To remove the lamp unit, remove the two securing nuts from the rear of the unit and draw the unit forwards.

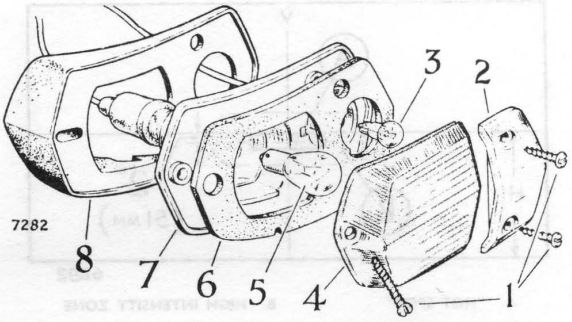

1. RETAINING SCREWS
2. CLEAR LENS
3. CAPLESS SIDE LAMP BULB
4. AMBER LENS
5. FLASHER BULB
6. LENS SEATING
7. LAMP BODY
8. RUBBER PLINTH

Fig. 39. *L722 side and flasher lamp*

STOP, TAIL AND REAR FLASHER LAMPS

Lucas L654 (Fig. 41)

The light units have individual bulb-holders which are a push fit in the lamp body. The bulbs are accessible for renewal from within the luggage boot. To renew the bulbs, it is only necessary to pull the bulb holders from the lamp body, when the defective bulb can be withdrawn. To renew the lenses, it will be necessary to remove the complete lamp unit to obtain access to the securing self-tapping screws.

The complete lamp unit can be removed and dismantled by unscrewing the two securing nuts from within the boot. Reassembly is a reverse of the dismantling procedure, but care should be exercised to properly locate the rubber sealing washers.

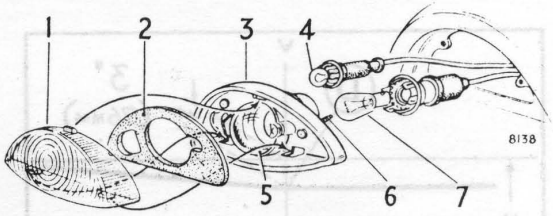

1. FRONT LENS
2. LENS SEAL
3. LAMP BODY
4. SIDELIGHT BULB
5. AMBER HOOD
6. FIXING STUDS
7. FLASHER BULB

Fig. 40. *L756 side and flasher lamp*

Lucas L692, L691 and RER31 (Fig. 42)

These are separate units fitted to form a cluster on an oval-shaped panel. To renew any one bulb, remove two securing screws from the particular lens and withdraw the lens. The bulb can now be removed and a new one fitted. The stop/tail lamp has a double filament bulb which is formed with offset locating lugs to ensure correct assembly.

To remove the lamp units, unscrew the nuts at the rear of the lamps, disconnect the cables at their Lucar connectors and withdraw the lamps. Reassembly is a reverse of the dismantling procedure, but care should be exercised to properly locate the rubber sealing washers.

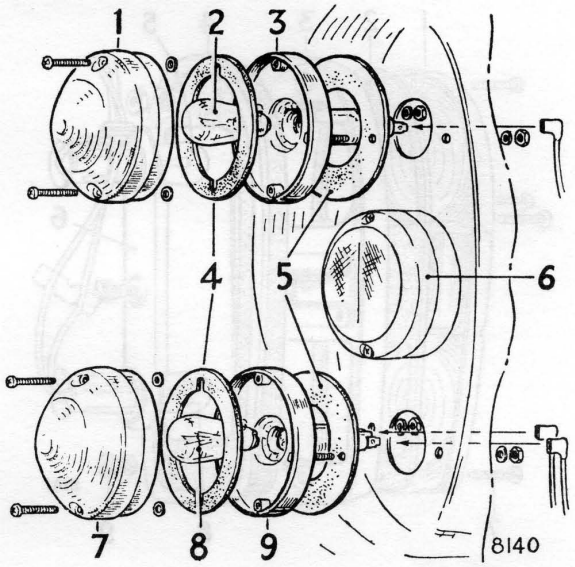

1. AMBER LENS
2. FLASHER BULB
3. LAMP BODY (FLASHER)
4. LENS SEAL
5. LAMP SEAL
6. REAR REFLECTOR
7. RED LENS
8. STOP/TAIL BULB
9. LAMP BODY (STOP/TAIL)

Fig. 42. *L692, L691 and RER31 lamp arrangement*

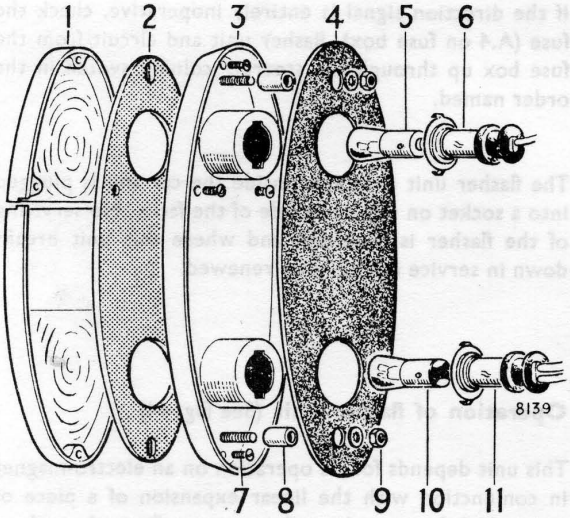

1. LENS (AMBER TOP) (RED BOTTOM)
2. LENS SEAL
3. LAMP BODY
4. LAMP SEAL
5. FLASHER BULB
6. BULB HOLDER
7. FIXING SCREWS
8. DISTANCE PIECE
9. FIXING NUT
10. STOP/TAIL BULB
11. BULB HOLDER

Fig. 41. *L654 stop/tail and flasher lamp details*

Lucas L572 (Fig. 43)

The two-piece lens on this unit can be detached without removing or dismantling the complete unit. To remove the lens, it will be only necessary to undo the four recessed screws, when the lens can be withdrawn. The complete unit is fixed to the rear panel by two hexagon nuts. Access to the nuts is obtained from within the luggage boot. On removing the nuts and disconnecting the cables, the unit can be withdrawn as an assembly.

A double-filament bulb for the stop/tail lamp, and a single filament bulb for the flashing indicator are mounted on a detachable bracket fixed to the rear of the unit by a knurled screw. To renew any one bulb, undo the screw and remove the bracket. The defective bulb can now be withdrawn and a new one fitted.

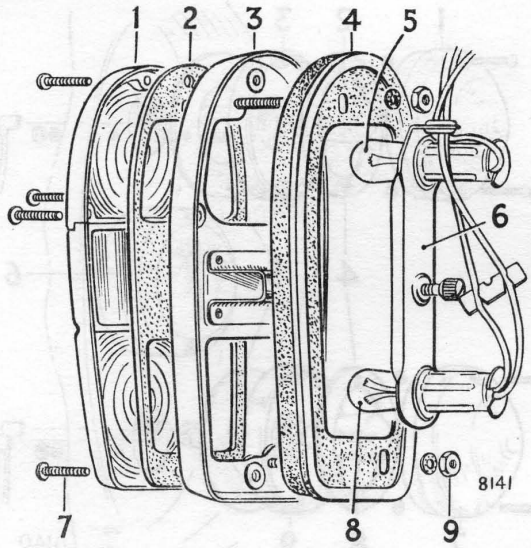

1. LENS (AMBER TOP) (RED BOTTOM)
2. LENS SEAL
3. LAMP BODY
4. LAMP SEAL
5. FLASHER BULB
6. BULB HOLDER ASSEMBLY
7. LENS FIXINGS
8. STOP/TAIL BULB
9. LAMP FIXING NUTS

Fig. 43. *L572 stop/tail and flasher lamp details*

DIRECTION INDICATOR AND HEADLAMP FLASHER

Direction Indicators

The correct operation of direction signals requires that the flasher filament in the lamp bulbs (depending on the position of the switch) flash intermittently whether or not the headlamps, parking lamps, tail lamps or stop lamps are "on".

A correctly operating direction signal will be indicated by a regular intermittent flashing of the green pilot lamp located on facia panel.

If, when the direction indicator is switched on, the warning (or pilot) lamp does not flash in the usual manner but remains unlit, first check that this is not due to filament failure in either the front or rear lamp on that side.

This can be checked by turning the switch to the opposite side—if the pilot lamp now flashes, the circuit is in order and bulb replacement is indicated.

On the other hand, if the pilot lamp still does not flash, inspect the indicator lamps. If these are working normally, failure of the pilot lamp bulb is indicated.

If, however, the indicator lamps are not functioning, it will be necessary to proceed to check the wiring and flasher unit.

The efficiency of the flasher unit may be readily checked by plugging in a known substitute.

The inoperative flasher lamp bulbs should be checked for a burned-out filament. Where it is found that neither lamp has a burned-out filament the wiring between the defective lamp and indicator switch must be checked.

If the direction signal is entirely inoperative, check the fuse (A.4 on fuse box), flasher unit and circuit from the fuse box up through the steering column switch in the order named.

The flasher unit is located inside the car and is plugged into a socket on the underside of the facia. No servicing of the flasher is required, and where this unit breaks down in service it should be renewed.

Operation of flasher unit (See Fig. 44)

This unit depends for its operation on an electro-magnet in conjunction with the linear expansion of a piece of wire which becomes heated as current flows through it. The expanding and contracting of the wire controls the speed at which the armature carrying the moving contact will move, as a result of the pull exerted by the electro-magnet and the sequence of operations is as follows:—

As current flows from terminal "B" to terminal "L" and the lamps *via* the resistance wire and electro-magnet, the wire heats up and expands.

This allows the armature carrying one of the contacts to be attracted to the pole piece of the electro-magnet closing contacts (A) and full voltage is then applied to the lamps *via* the windings of the electro-magnet. Contacts (B) are also closed completing the pilot lamp circuit.

While contacts (A) are closed the resistance wire is short circuited and cools off. The taut section of the resistance wire contracts and pulls back the armature to open contacts (A).

The pilot lamp on the facia panel will not flash unless sufficient current to light the filaments in front flasher lamp and rear flasher lamp is passing through the windings of the electro-magnet to close contacts (B). The flashing pilot lamp, therefore, gives the driver a clear indication that the direction signals are working correctly.

It will be noted that in order to maintain the desired rate of flashing (British Ministry of Transport regulations, 60—120 per minute) the filaments of the front and rear lamps are "pre-heated" *via* the resistance wire during "out" period of the flash.

Headlamp flasher switch

The direction indicator also incorporates the switch for flashing the headlamps, this is achieved by moving the lever stalk towards the steering wheel and in so doing an insulated spring-loaded plunger, operated by the inner end of the lever, is depressed to make switch contact so that the headlamps will illuminate in the main beam condition and will remain so until upward pressure on the lever is released.

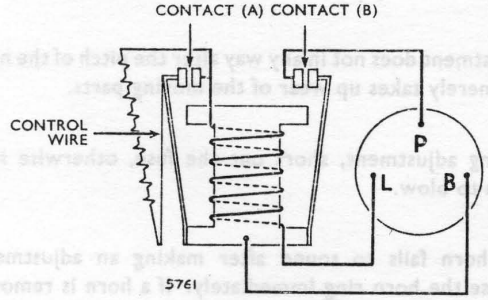

Fig. 44. *Internal connections of flasher unit*

When the lever is released the switch will return to the OFF position under the influence of its spring and the headlamps will extinguish.

Headlamp flashing can be accomplished irrespective of the lever position, i.e., whilst using either direction indicator.

When the headlamp flasher system is functioning correctly, each application of the switch lever in the upward direction will produce the main beam condition.

Should any one headlamp fail to illuminate a check is to be made to ensure that the connections to the headlamp are secure, if on inspection the connections are found to be satifactory the suspect lamp unit is to be changed for a unit which is known to be serviceable.

(This does not apply to vehicles in certain export territories where the lamps are fitted with pre-focus bulbs and are renewed in the manner described in earlier paragraphs).

In the event of the headlamps failing to illuminate when the switch is operated, the circuit from the switch to the starter solenoid should be checked. If after test the switch is found to be defective, it must be renewed as the switch cannot be repaired.

CAUTION:

It is inadvisable to use the headlamp flasher continuously when the headlamps are already in the dipped condition as the excess heat generated by both filaments will greatly lessen the life of the lamp units or bulbs, whichever is appropriate.

HORNS

LUCAS WINDTONE HORN, Model 9H (Fig. 45)

The horns operate on the principle of a resonating air column vibrated by means of a diaphragm which is actuated electro-magnetically by a self-interruptory circuit.

The tonal quality of each horn is adjusted to give its best performance before leaving the manufacturers, consequently, it should require no further attention until it has given a long period of service.

However, in the event of a single or both horns failing to sound satisfactorily, the cause can be diagnosed and rectified as follows:—

Do not dismantle the horn(s) beyond the instructions given in the following paragraphs and on no account is the central locknut or slotted stem to be disturbed on the 9H model horn(s).

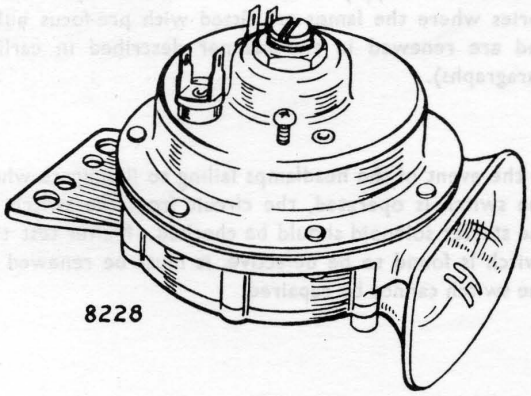

Fig. 45. *Lucas model 9H horn*

Maintenance

If the horn suddenly fails to sound after operating normally the cause is unlikely to be in the horn itself.

First ensure that the cause is not due to such defects as a loose or broken connection in the horn wiring circuit.

A short circuit in the horn wiring will cause the fuse to blow. In this event, examine the wiring to locate the fault and rectify accordingly before renewing the fuse.

Failure of the horn to perform correctly can be attributed to either a discharged battery, faulty or loose connections or loose mounting bolts; check and remedy as found necessary.

If on inspection these points are found to be in order, it is possible that the horn requires adjustment.

Adjustment

Where twin horns are fitted disconnect one whilst carrying out adjustment on the other, at the same time ensuring that the current supply cable does not come into contact with any part of the vehicle metalwork.

Adjustment does not in any way alter the pitch of the note but merely takes up wear of the moving parts.

During adjustment, short out the fuse, otherwise it is liable to blow.

If a horn fails to sound after making an adjustment, release the horn ring immediately. If a horn is removed from the vehicle for the purpose of carrying out adjustment, it is to be held firmly in a vice by the mounting bracket so that the best results in sound are obtained.

Method (i) Adjustment is provided by either a plain or a serrated screw which is located adjacent to the horn terminals. Rotate this screw in an anti-clockwise direction until the horn just fails to sound, then rotate it in the reverse direction for one quarter turn.

Method (ii) If a first grade 0—10 moving coil ammeter is available, connect it in series with the horn. A 9H model horn in correct adjustment will pass 3·0 to 3·5 amperes. Rotate the adjusting screw in a clockwise direction in order to increase the current and in the reverse direction to reduce it until the best performance is obtained within the stated current range.

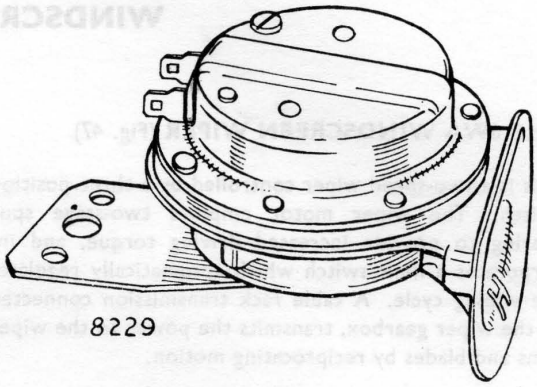

Fig. 46. *Clear Hooter model F725 horn*

CLEAR HOOTER HORN, Model F725 (Fig. 46)

These horns are a riveted assembly and, therefore, cannot be dismantled. If the horns are removed from the vehicle for the purpose of tonal adjustment, they are to be held firmly in a vice by the mounting bracket so that the best results in sound are obtained.

Sound—loss of volume

Normally this condition is caused by insufficient current being drawn by the defective horn in which case the adjusting screw is to be rotated slowly clockwise until the volume of sound is restored, then rotate the adjusting screw slowly anti-clockwise to the point where the volume of sound is just maintained. At no time should the operating current exceed 3·5 amperes.

Intermittent operation

Usually this cause can be attributed to that of maladjustment or the presence of foreign matter between the contact points. In this instance the adjusting screw is to be rotated slowly in a clockwise direction for almost one half turn. Should the horn fail to sound after carrying out this adjustment, the screw is to be rotated in the reverse direction until the horn operates at the correct volume, which should occur within 180 degrees either side of the original setting.

Complete failure of sound

In the event of a complete failure, examine the appropriate fuse and the electrical connections in the horn circuit for security and carry out a voltage check to establish whether the correct voltage is available at the horn terminals.

If it was observed that a gradual deterioration in volume was apparent before the failure then the instructions outlined under the heading "Sound—loss of volume" are to be carried out.

Should the horns have been operating satisfactorily prior to a sudden failure, the horn circuit is to be checked in order to establish the current capacity, should this be in excess of 3·5 amperes, the adjusting screw is to be rotated slowly in an anti-clockwise direction until the horns are restored to their correct volume of sound.

If the current capacity is less than that specified the adjusting screw is to be rotated slowly in the reverse direction until the correct volume is obtained.

WINDSCREEN WIPERS

THE 6WA WINDSCREEN WIPER (Fig. 47)

This is a two-speed wiper controlled by a three-position switch. The wiper motor employs two-stage spur gearing to provide increased driving torque, and incorporates a limit switch which automatically regulates the wiping cycle. A cable rack transmission connected to the wiper gearbox, transmits the power to the wiper arms and blades by reciprocating motion.

Limit switch operation

The limit switch is located in the wiper gearbox cover. It ensures that the wiper arms and blades come to rest at the end of each wiping cycle, irrespective of their positions at the instant of switching off. The switch comprises a sector-type fixed contact on the gearbox cover, and a moving contact carried on the gearbox crankpin.

For the greater part of each wiping cycle, the limit switch contacts are closed, thus shorting out the panel control switch and providing an alternative earth return path for the motor current. Each time the wiper blades reach the side of the windscreen at which they are normally parked, the limit switch opens. Thus, when the control switch is turned to "OFF", the motor continues to operate until the blades reach their parked position.

Control of speeds (Refer to Fig. 48)

With the switch in the "OFF" position, the motor is isolated from earth, and is therefore made inoperative. Turning the switch to the "NORMAL" speed position completes the armature and field circuit, and with the resistor being short circuited, the motor operates at the lower speed. Moving the switch into the "HIGH" speed position causes the resistor to be switched into circuit, thereby increasing the speed of the motor.

Testing and adjusting

Measuring supply voltage:

Using a first grade moving coil voltmeter, measure the voltage between the motor supply terminal (to which the green cable is connected) and a good earthing point. This should be 11·5 volts with the wiper working normally. If the reading is low, check the battery, switch (by substitution), cabling and connections.

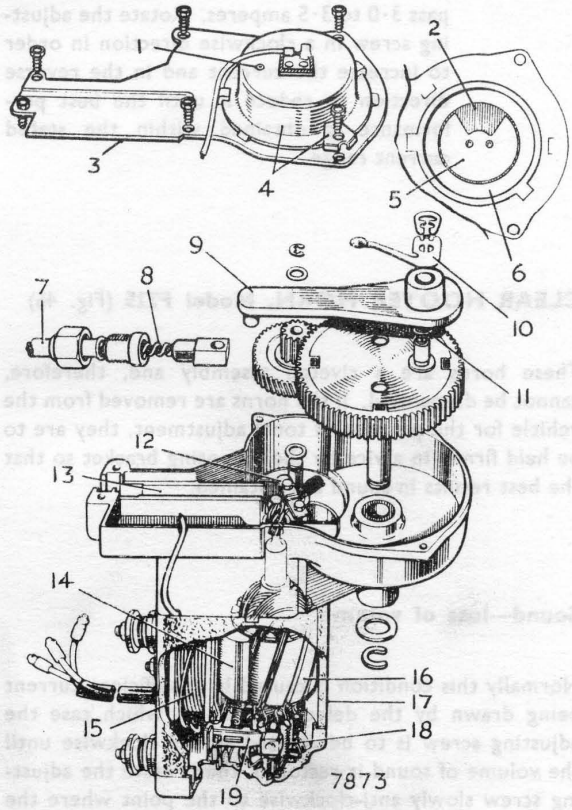

1. SETTING PIP
2. INSULATED SECTOR
3. GEARBOX COVER
4. DOMED COVER AND FIXINGS
5. LIMIT SWITCH FIXED CONTACT
6. INSIDE OF COVER
7. PROTECTIVE TUBING
8. CABLE RACK
9. CONNECTING ROD
10. LIMIT SWITCH MOVING CONTACT
11. PEN—STEEL WASHER
12. ARMATURE STOP-PLATE
13. CROSS-HEAD GUIDE CHANNEL
14. POLE SHOE
15. FIELD COIL
16. ARMATURE
17. MOTOR BODY (YOKE)
18. COMMUTATOR
19. BRUSH GEAR

Fig. 47. *6WA wiper motor and gearbox*

Measuring light running current:

If the normal running terminal voltage is correct, disconnect the cable rack at the wiper gearbox and measure the light running current with a first grade moving coil ammeter connected in the supply cable. As this involves removing the gearbox cover, the opportunity can be taken to observe the speed of operation by counting the revolutions per minute of the final gear.

The light running current must not exceed 3·4 amperes at normal speed (44—48 c.p.m.). If it does, fit a new windscreen wiper motor.

Check cable rack and tubing:

The maximum permissible force to move the cable rack in its protective tubing is 6 lb. (2·7 kg.) with the wiper arms, blades and motor disconnected. The measurement can be made by hooking a spring balance in the hole in the crosshead (into which a pin on the connecting rod is normally located) and withdrawing the rack with the balance.

Binding of the rack can be due to kinked or flattened tubing or to faulty installation. Minor faults can be cleared with a suitable test mandrel sold specifically for checking wiper installations. Badly kinked or flattened tubing must be renewed. Any bends of less than 9 in. (23 cm.) radius must be re-formed.

At the wheelboxes the flared ends of the intermediate tubing should be located in the inner wide slots of the wheelbox clamp plates but the end of the main tubing should be located in the outer narrow slot.

The cable rack should be well lubricated with Shell Retinax "A".

Checking wheelboxes:

Check the wheelboxes for misalignment or looseness and rectify as required.

Renew seized wheelboxes.

Setting wiper arms and limit switch:

To adjust the sweep of the wiper arms, remove and refit the arms in the manner described under the appropriate heading. The wiper gearbox limit switch cover is not to be used for this purpose.

If it is necessary for any reason to remove the limit switch cover, make sure it is refitted in its original position, otherwise the effective wiping arc of the wiper blades will be incorrect. The original position for right-hand drive models is when the setting pip is at the furthest point away from the cable transmission, while for left-hand drive models the pip position is the nearest point to the cable transmission.

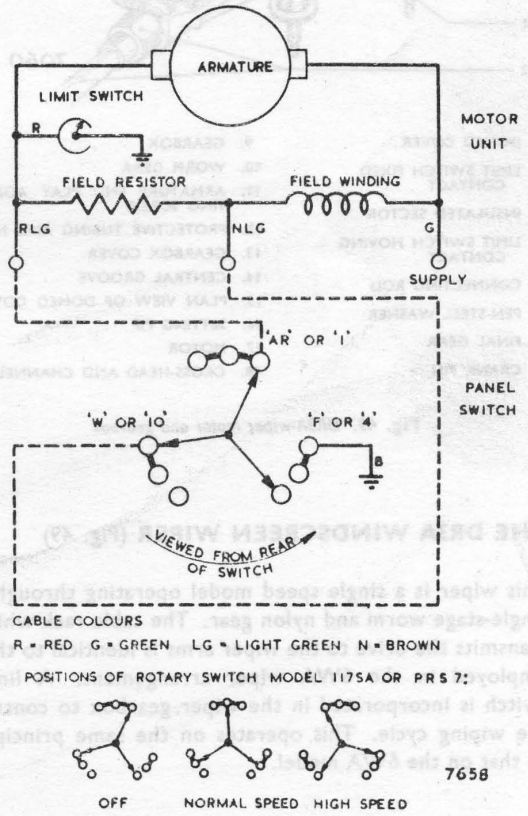

Fig. 48. *Internal connections of 6WA two-speed wiper and switch*

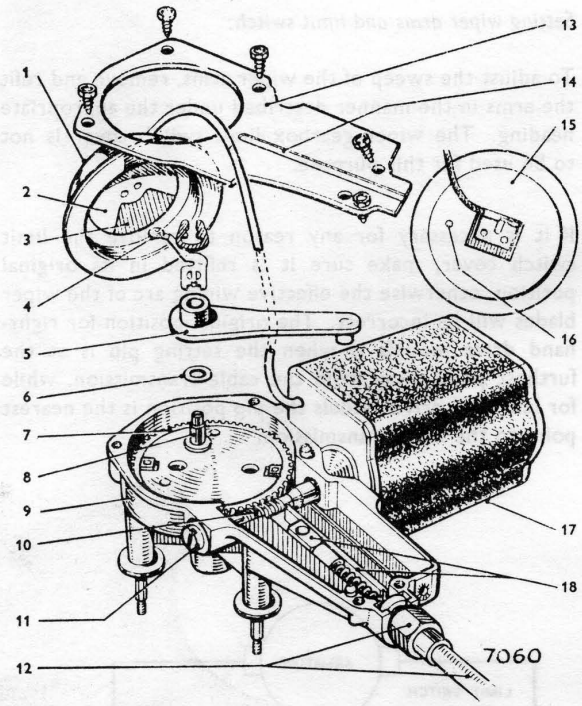

1. DOMED COVER
2. LIMIT SWITCH FIXED CONTACT
3. INSULATED SECTOR
4. LIMIT SWITCH MOVING CONTACT
5. CONNECTING ROD
6. PEN-STEEL WASHER
7. FINAL GEAR
8. CRANK PIN
9. GEARBOX
10. WORM GEAR
11. ARMATURE END PLAY ADJUSTING SCREW
12. PROTECTIVE TUBING AND NUT
13. GEARBOX COVER
14. CENTRAL GROOVE
15. PLAN VIEW OF DOMED COVER
16. SETTING PIP
17. MOTOR
18. CROSS-HEAD AND CHANNEL

Fig. 49. *DR3A wiper motor and gearbox*

THE DR3A WINDSCREEN WIPER (Fig. 49)

This wiper is a single speed model operating through a single-stage worm and nylon gear. The cable rack which transmits the drive to the wiper arms is identical to that employed in the 6WA wiper arrangement. A limit switch is incorporated in the wiper gearbox to control the wiping cycle. This operates on the same principle to that on the 6WA model.

Servicing

The servicing procedure and method of testing is the same as given in earlier paragraphs for the 6WA windscreen wiper.

WIPER ARMS AND BLADES

Efficient wiping is dependent upon having a clean windscreen and wiper blades in good condition.

Use methylated spirits to remove oil, tar spots and other stains from the windscreen. Silicone and wax-based polishes must not be allowed to contaminate the screen or wiper blades.

Worn or perished wiper blades are easily removed for renewal.

Wiper arms—To remove and refit (See Fig. 50)

Lift the spring retaining clip and slide the arm from the spindle. Serrations provide 5° adjustment steps for the arm. Refit arm and check sweep of operation.

COMBINED WINDSCREEN WIPER SWITCH AND WASHER CONTROL

Integral with the switch on certain models is a windscreen washer pump unit, the control knob for the windscreen wipers also actuating, when depressed, the bellows of the pump unit.

The switch unit and bellows unit are separable from each other, so that where one unit becomes defective in service it can be dismounted from its mating unit and a new unit installed.

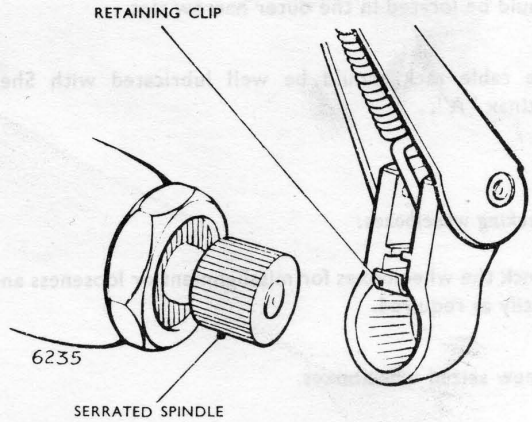

Fig. 50. *Wiper blade and adjustment*

All that is necessary to detach the bellows unit from the switch, is to unscrew the unit leaving the switch in position. Before detaching Lucar connectors from the rear of the switch, always disconnect the negative (earth) terminal from the battery.

The complete assembly is retained to the facia panel by a chromium plated ring-nut which is situated at the front of the facia immediately in front of the control knob; to detach the control knob, first depress the spring-loaded catch which extends from the control shaft into the shank of the knob.

Do not attempt further disassembly as no provision is made for the repair of defective units.

INSTRUMENTS

FUEL AND TEMPERATURE INDICATORS (Fig. 51)

The bimetal resistance equipment for fuel contents and temperature indication consists, in each case, of an indicator head and transmitter unit connected to a common voltage stabilizer.

In both applications the indicator head operates on a thermal principle, using a bimetal strip surrounded by a heater winding and the transmitter unit is of a resistance type.

Instrument voltage stabilizer (Figs. 51 and 52)

The system by which the equipment functions is voltage sensitive and the voltage stabilizer which serves both indicators is necessary to ensure a constant supply of a predetermined voltage to the equipment. The stabilizer is situated behind the instrument panel.

The mean voltage between terminal "I" and earth is 10 volts. Renew the stabilizer if faulty.

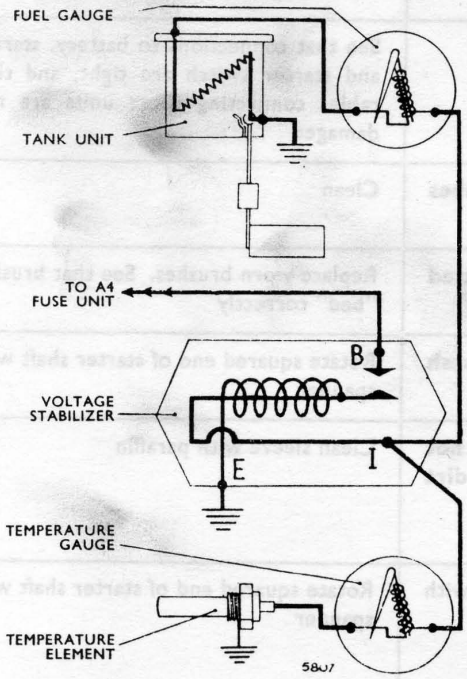

Fig. 51. *Fuel and temperature indicators and voltage stabilizer*

SERVICING PRECAUTIONS

Ensure that the cables from the instruments are connected to their proper terminals on the stabilizer.

Ensure that the stabilizer is mounted with its securing lug set vertically and the fixing hole downwards.

Ensure that the stabilizer is effectively earthed through its mounting lug.

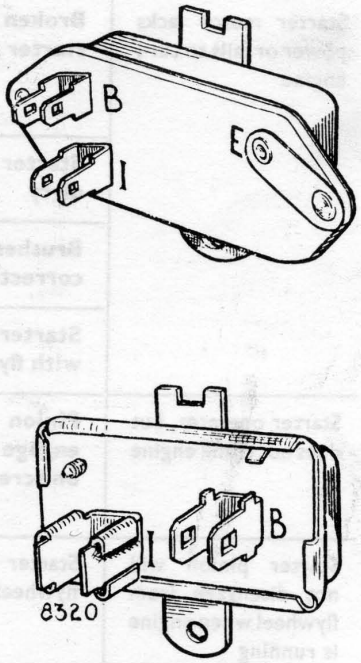

Fig. 52

Two types of voltage stabilizer to be found in service. Failure to observe the precautions will result in inaccurate instrument readings

LOCATION AND REMEDY OF FAULTS

STARTER MOTOR TROUBLE

Symptoms	Possible Causes	Remedy
	Stiff engine, indicated by inability to turn by hand	Locate and remedy cause of stiffness
	If engine can be turned by hand then trouble may be due to:—	
	Battery discharged	Start by hand. Charge battery either by a long period of day-time running or from independent electrical supply
Starter motor lacks power or fails to turn engine	**Broken or loose connection in starter circuit**	See that connections to battery, starter and starter switch are tight, and that cables connecting these units are not damaged
	Starter commutator or brushes dirty	Clean
	Brushes worn, or not fitted correctly	Replace worn brushes. See that brushes "bed" correctly
	Starter pinion jammed in mesh with flywheel	Rotate squared end of starter shaft with spanner
Starter operates, but does not crank engine	**Pinion of starter drive does not engage with flywheel, due to dirt on screwed sleeve**	Clean sleeve with paraffin
Starter pinion will not disengage from flywheel when engine is running	Starter pinion jammed in mesh with flywheel	Rotate squared end of starter shaft with spanner

CHARGING TROUBLE

ON SYSTEMS EMPLOYING DIRECT CURRENT GENERATOR

Symptoms	Possible Causes	Remedy
	Generator not charging when running at about 20 m.p.h. with no lights in use. Due to:—	
	Broken or loose connection in generator circuit, or regulator not functioning correctly	Examine charging and field circuit wiring. Tighten loose connection or replace broken lead. Particularly examine battery connections. Examine regulator
	Commutator greasy or dirty	Clean with soft rag moistened in petrol
Battery in low state of charge, shown by lack of power when starting. (Hydrometer reading less than 1·200)	**Giving low or intermittent output, when car is running steadily in top gear.** Due to:—	
	Generator belt slipping	Adjust belt (see Section B)
	Loose or broken connections in generator circuit	Examine charging and field circuits wiring. Tighten loose connections or replace broken lead. Particularly examine battery connections
	Brushes greasy or dirty	Clean with soft rag moistened in petrol
	Brushes worn or not fitted correctly	Replace worn brushes. See that brushes "bed" correctly
	Regulator not functioning correctly	Examine regulator
Battery overcharged, shown by burnt-out bulbs and very frequent need for "topping up". Hydrometer readings high	**Giving high output.** Due to:—	
	Regulator not functioning correctly	Examine regulator

DIAGNOSIS AND TESTING PROCEDURE

ON SYSTEMS EMPLOYING ALTERNATORS

THIS CHART should be used in conjunction with the circuit diagram shown in Fig. 20a, and the procedure must be carried out in the sequence indicated, except for the last item which can be carried out separately. Throughout the procedure, the precautions outlined earlier in this Section must be strictly observed to avoid damaging the units in the system.

Unit	Recommended Procedure
DRIVING BELT	Check for wear and tension. Renew or adjust as necessary.
CIRCUIT	Test continuity of circuit and tighten all connections. Check for reversed cables and defective insulation.
BATTERY	Check condition of battery. Clean and tighten terminal connections. Check for current at the alternator positive field terminal when the ignition is switched "OFF". Any current at this point when the ignition is "OFF" indicates that the 6RA relay contacts are not opening, thus allowing the battery to discharge through the alternator field. Remedy by fitting a new relay.
FIELD ISOLATING RELAY 6RA	Check that current is reaching the alternator positive field terminal when the ignition is switched "ON". If there is no current, temporarily link the relay terminals "C1" and "C2" by means of a jumper lead. If the alternator now shows an output at charging speed, the relay is faulty and must be renewed.
ALTERNATOR	Test the current output of the alternator in the manner described earlier in this Section. At alternator speed of approximately 4,000 r.p.m. (2,100 engine r.p.m.) the output should be 25 amperes or more. A low or zero current reading will indicate a faulty alternator or poor circuit connections. Renew or rectify as necessary.
CONTROL UNIT 4TR	If the foregoing items are in good order, the fault will lie in the control unit. Test and adjust the unit in the manner described earlier in this Section. If the unit will not respond to adjustment, a replacement must be fitted. If a replacement is fitted, check the alternator current output as previously.
WARNING LAMP AND WARNING LAMP CONTROL 3AW	Check the voltage between alternator terminal "AL" and earth with the alternator running at 3,000 r.p.m. (1,600 engine r.p.m.) and side lamps switched "ON"; if the voltage exceeds 7·5 a faulty alternator diode or a faulty alternator-to-battery circuit is indicated. Fit new alternator or rectify as necessary. If the voltage at terminal "AL" is correct (between 7 and 7·5) check the warning lamp circuit, then the warning lamp bulb and warning lamp control 3AW by substitution. Fit new parts as necessary.

ALPINE

WIRING DIAGRAM

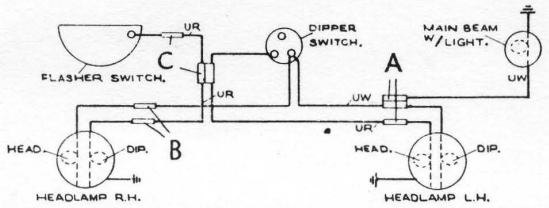

WIRING FOR HEADLAMP FLASH. L.HD. MODELS ONLY.

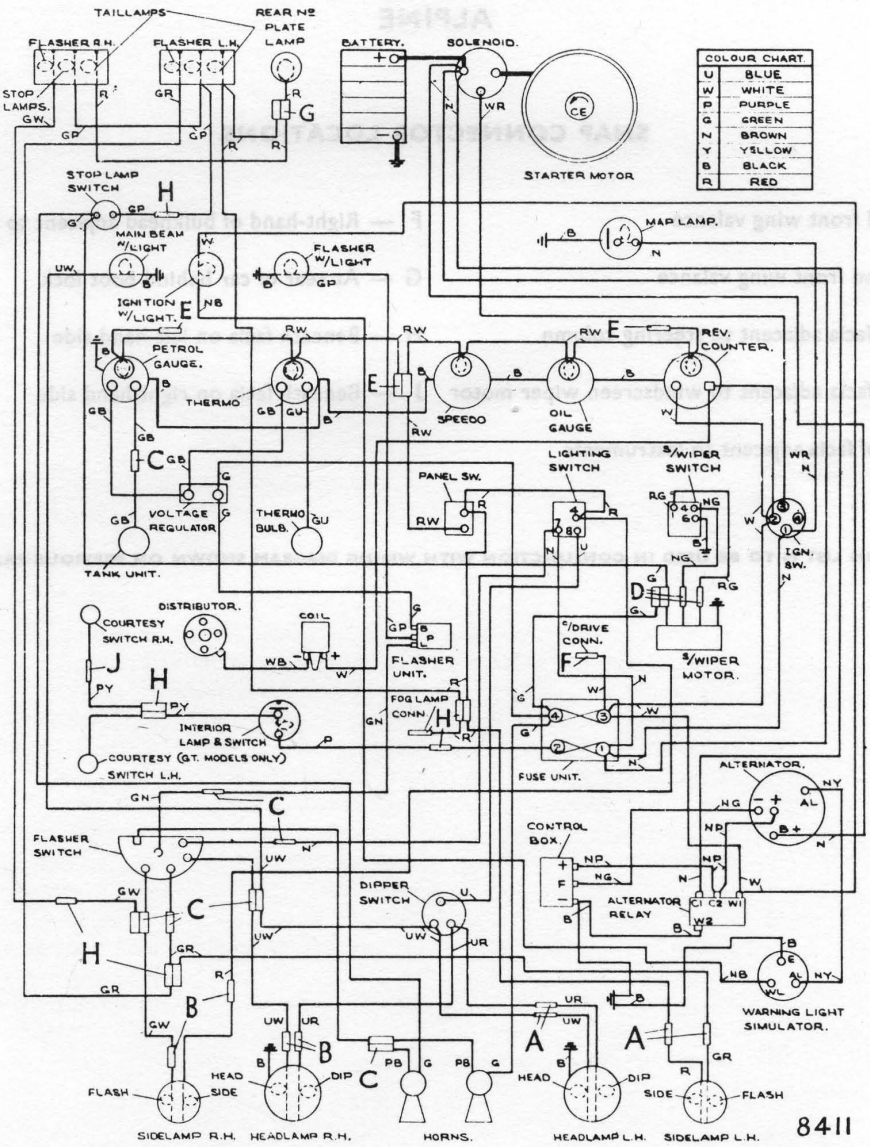

A LIST OF SNAP CONNECTOR LOCATIONS IS SHOWN OVERLEAF FOR USE WITH THIS WIRING DIAGRAM

ALPINE

SNAP CONNECTOR LOCATIONS

A — Left-hand front wing valance

B — Right-hand front wing valance

C — Beneath facia adjacent to steering column

D — Beneath facia adjacent to windscreen wiper motor

E — At rear of facia adjacent to instruments

F — Right-hand of bulkhead adjacent to wing valance

G — At rear of car behind boot lock

H — Beneath facia on left-hand side

J — Beneath facia on right-hand side

THIS LIST IS TO BE USED IN CONJUNCTION WITH WIRING DIAGRAM SHOWN ON PREVIOUS PAGE

GAZELLE (Column or Floor Gear-change), MINX (Column Gear-change)

WIRING DIAGRAM

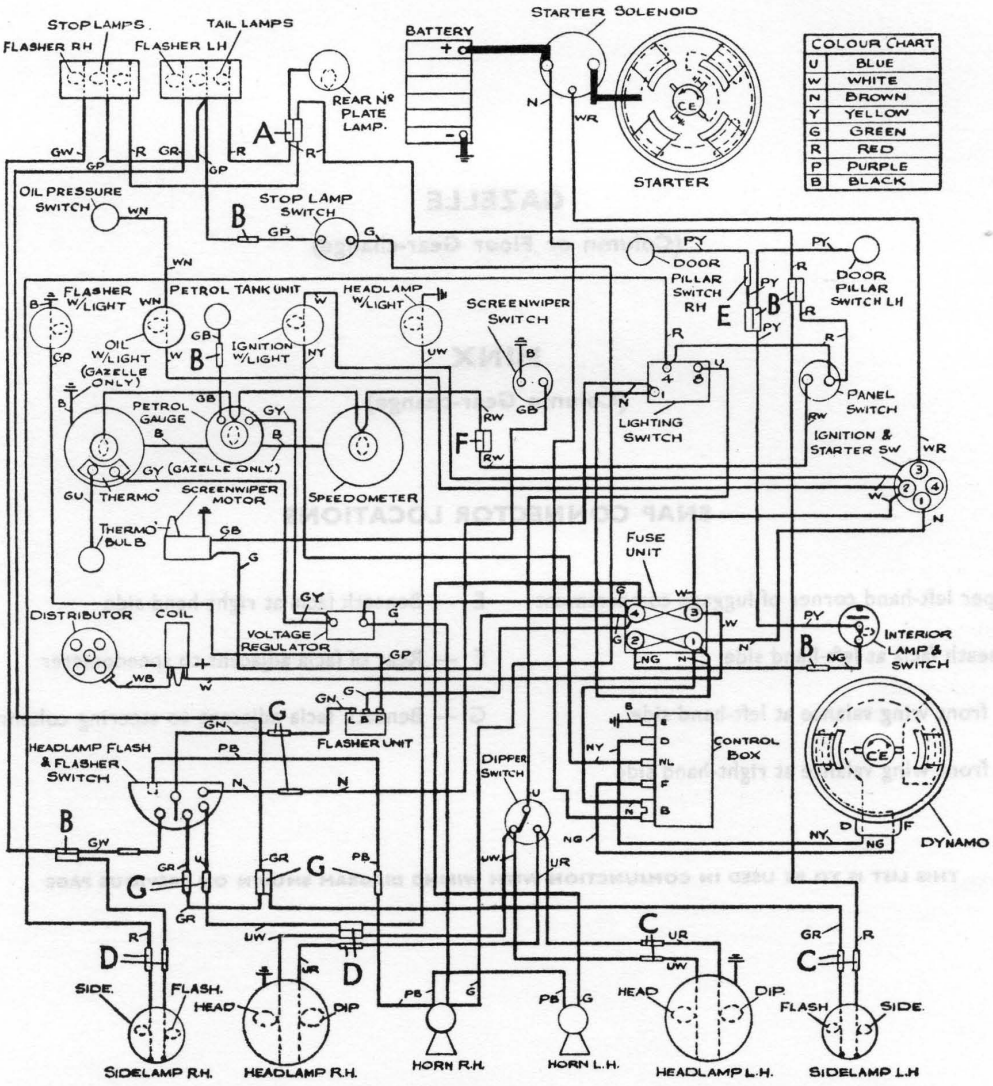

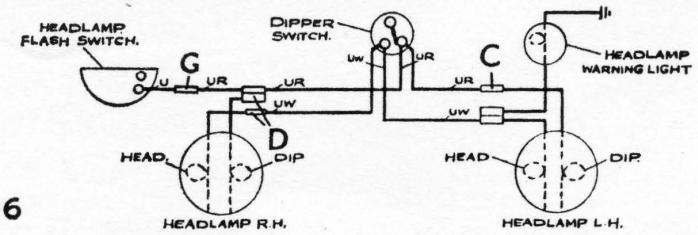

8406

WIRING OF HEADLAMPS, W/LIGHT & FLASH SW. FOR L.H.D.

A LIST OF SNAP CONNECTOR LOCATIONS IS SHOWN OVERLEAF FOR USE WITH THIS WIRING DIAGRAM

GAZELLE

(Column or Floor Gear-change)

MINX

(Column Gear-change)

SNAP CONNECTOR LOCATIONS

A — Upper left-hand corner of luggage compartment

B — Beneath facia at left-hand side

C — On front wing valance at left-hand side

D — On front wing valance at right-hand side

E — Beneath facia at right-hand side

F — Rear of facia adjacent to speedometer

G — Beneath facia adjacent to steering column in cowl

THIS LIST IS TO BE USED IN CONJUNCTION WITH WIRING DIAGRAM SHOWN ON PREVIOUS PAGE

MINX (Floor Gear-change)

WIRING DIAGRAM

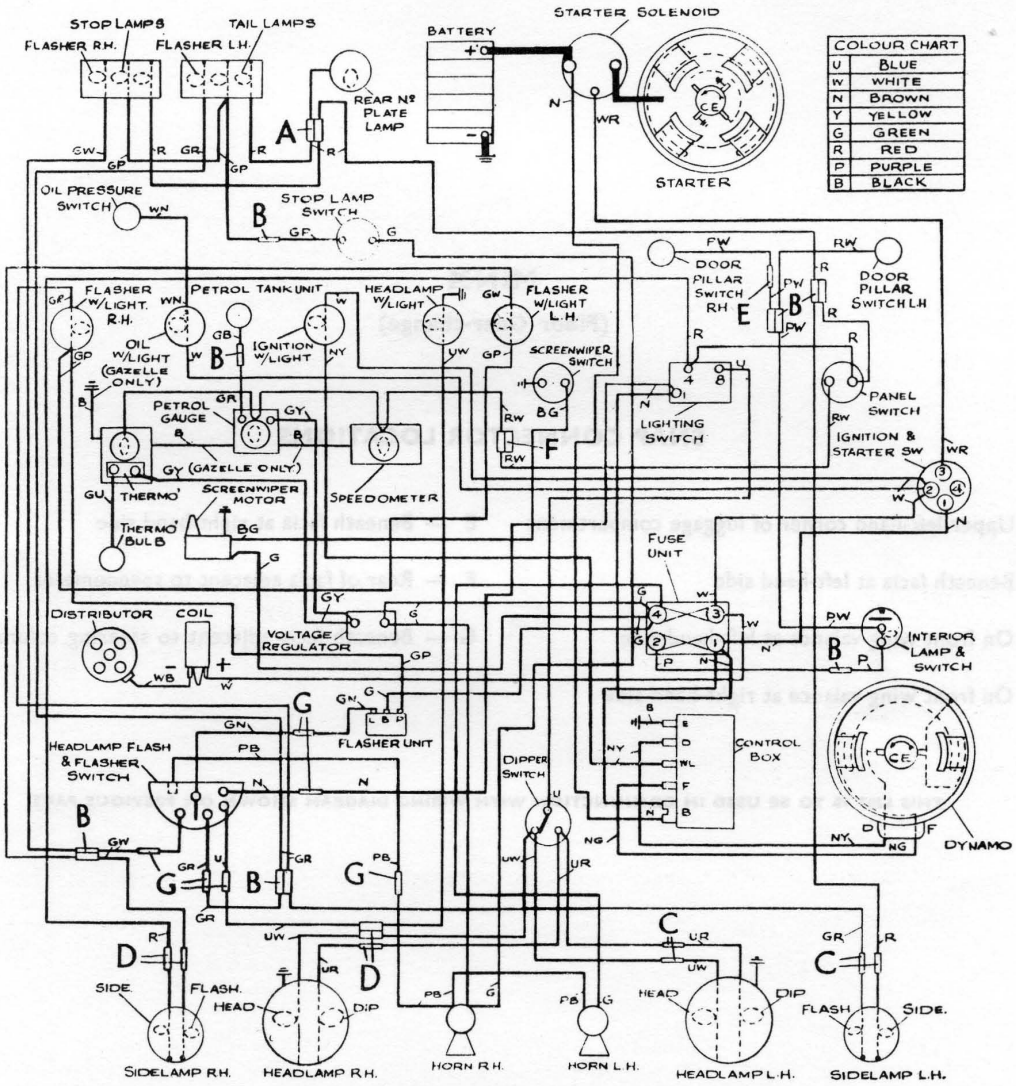

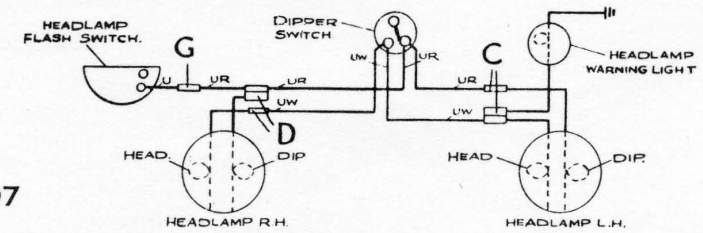

8407

WIRING OF HEADLAMPS, W/LIGHT & FLASH.SW FOR L.H.D.

A LIST OF SNAP CONNECTOR LOCATIONS IS SHOWN OVERLEAF FOR USE WITH THIS WIRING DIAGRAM

MINX
(Floor Gear-change)

SNAP CONNECTOR LOCATIONS

A — Upper left-hand corner of luggage compartment

B — Beneath facia at left-hand side

C — On front wing valance at left-hand side

D — On front wing valance at right-hand side

E — Beneath facia at right-hand side

F — Rear of facia adjacent to speedometer

G — Beneath facia adjacent to steering column in cowl

THIS LIST IS TO BE USED IN CONJUNCTION WITH WIRING DIAGRAM SHOWN ON PREVIOUS PAGE

RAPIER

WIRING DIAGRAM

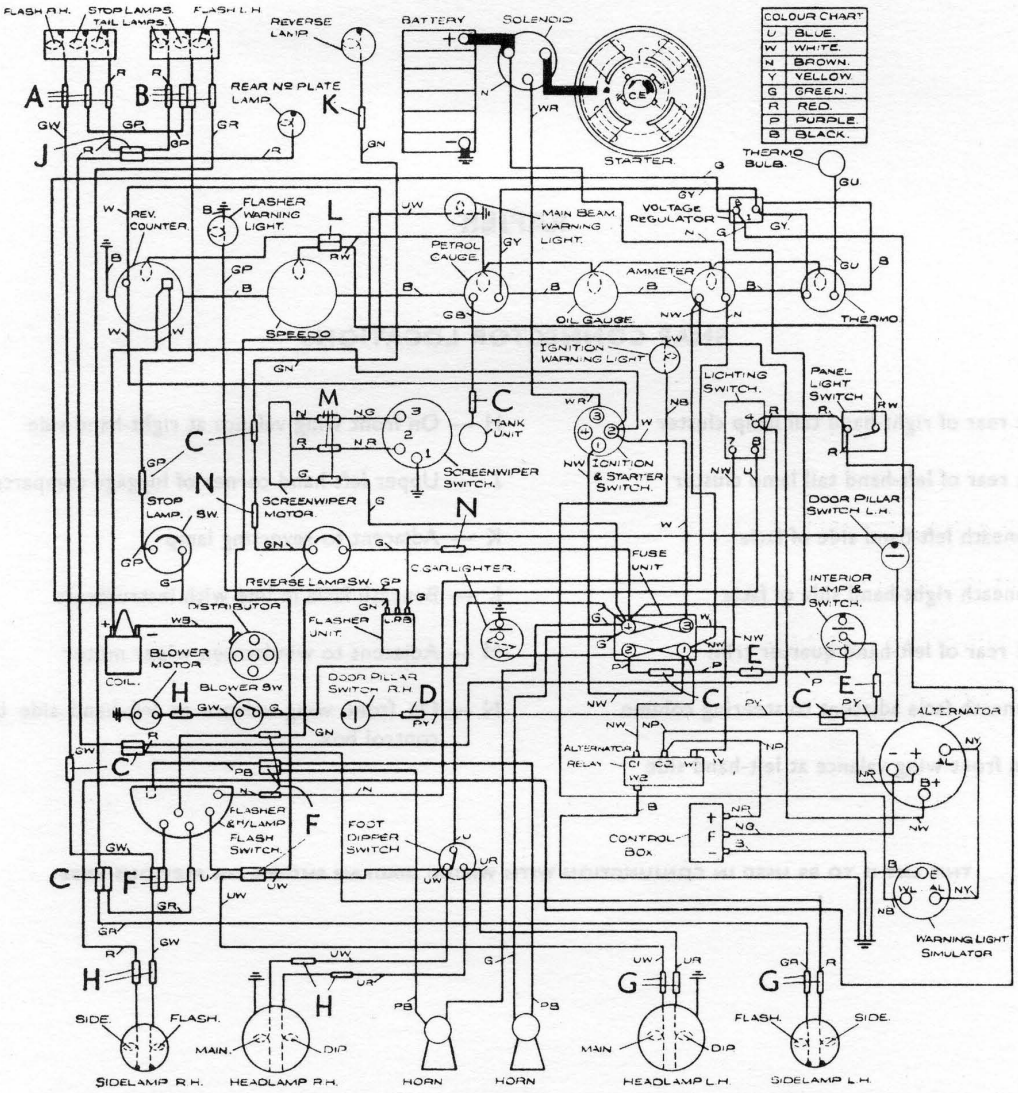

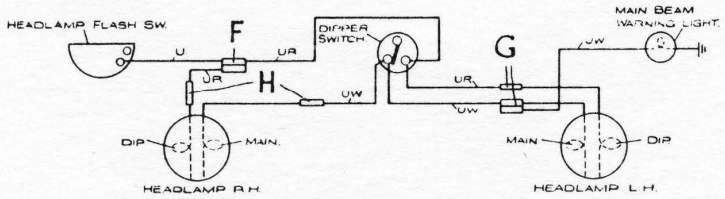

8409

WIRING OF HEADLAMPS, W/LIGHT & FLASH SWITCH FOR L.H.D.

A LIST OF SNAP CONNECTOR LOCATIONS IS SHOWN OVERLEAF FOR USE WITH THIS WIRING DIAGRAM

RAPIER

SNAP CONNECTOR LOCATIONS

A — At rear of right-hand tail lamp cluster

B — At rear of left-hand tail lamp cluster

C — Beneath left-hand side of facia

D — Beneath right-hand side of facia

E — At rear of left-hand quarter trim

F — Beneath facia adjacent to steering column

G — On front wing valance at left-hand side

H — On front wing valance at right-hand side

J — Upper left-hand corner of luggage compartment

K — Adjacent to reversing lamp

L — Beneath facia in line with instruments

M — Adjacent to windscreen wiper motor

N — On front wing valance at left-hand side beneath control box

THIS LIST IS TO BE USED IN CONJUNCTION WITH WIRING DIAGRAM SHOWN ON PREVIOUS PAGE

SUPER MINX
WIRING DIAGRAM

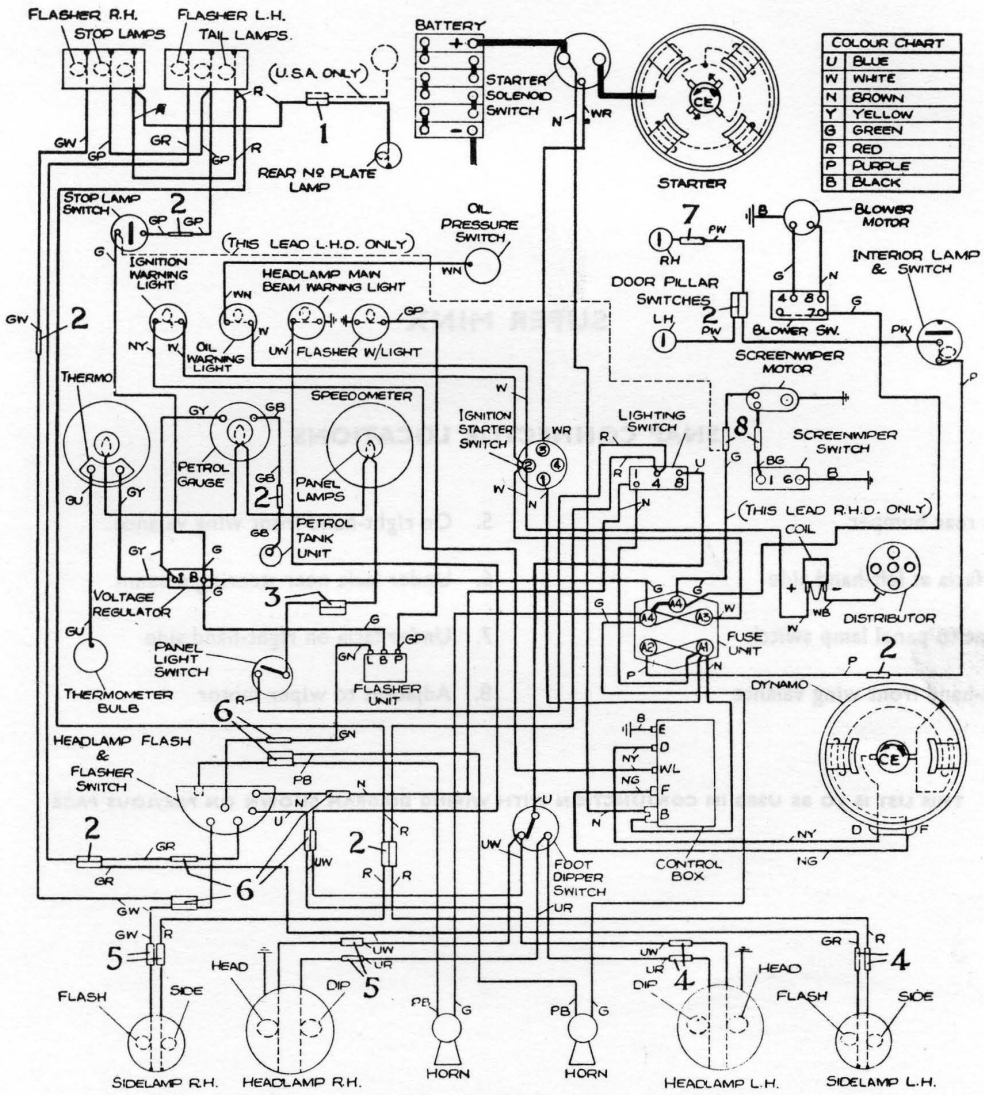

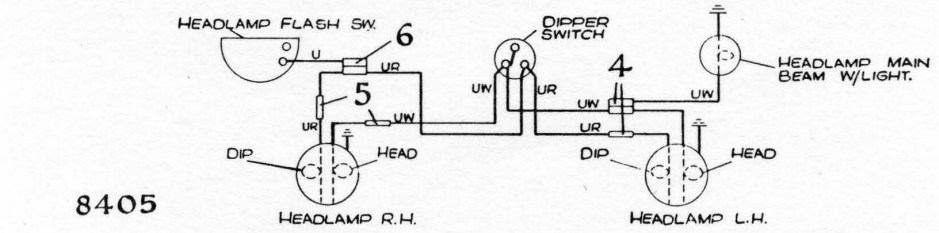

8405

WIRING OF HEADLAMPS, W/LIGHT & FLASH SW. FOR L.H.D.

A LIST OF SNAP CONNECTOR LOCATIONS IS SHOWN OVERLEAF FOR USE WITH THIS WIRING DIAGRAM

SUPER MINX

SNAP CONNECTOR LOCATIONS

1. Behind rear bumper
2. Under facia at left-hand side
3. Adjacent to panel lamp switch
4. On left-hand front wing valance
5. On right-hand front wing valance
6. Under facia near steering column
7. Under facia on right-hand side
8. Adjacent to wiper motor

THIS LIST IS TO BE USED IN CONJUNCTION WITH WIRING DIAGRAM SHOWN ON PREVIOUS PAGE

SUPER MINX SPORTS MODEL
WIRING DIAGRAM

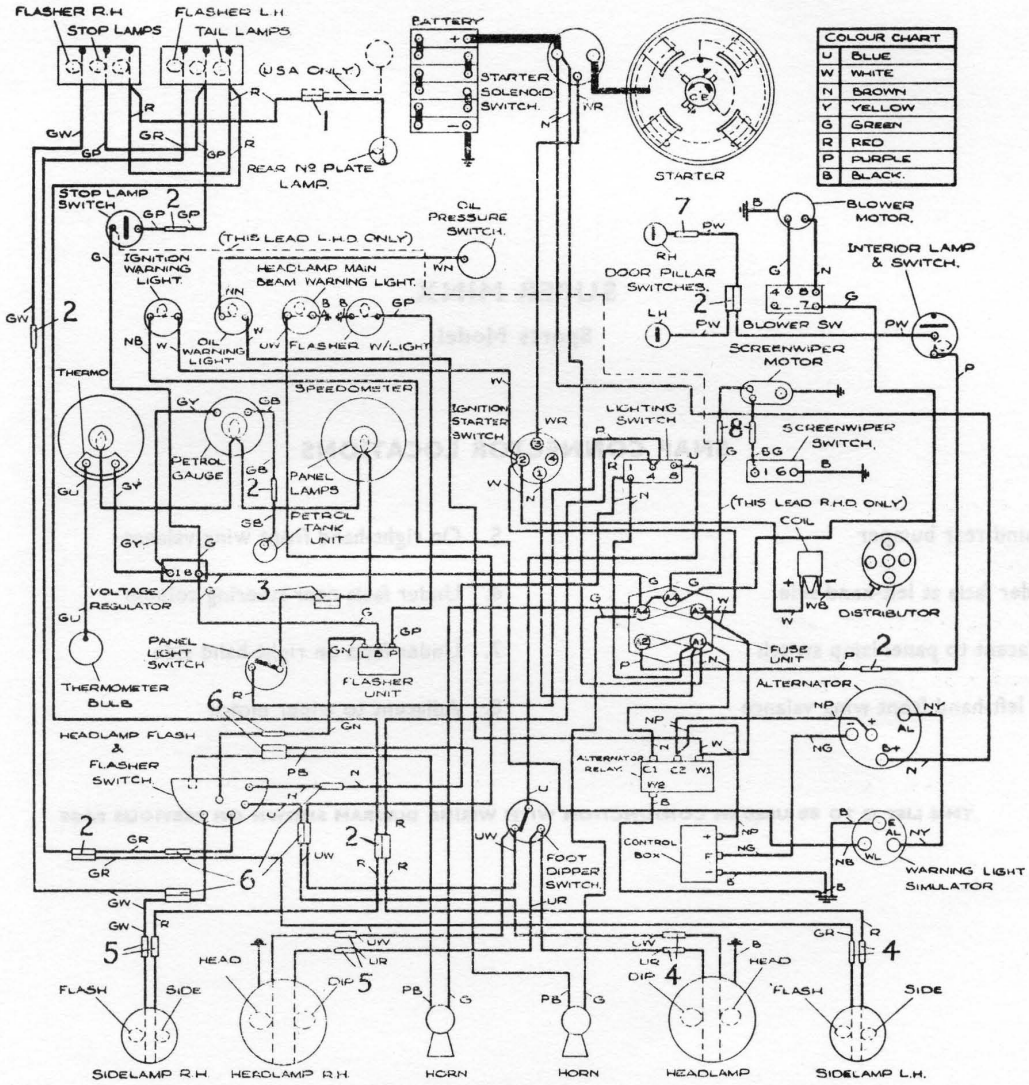

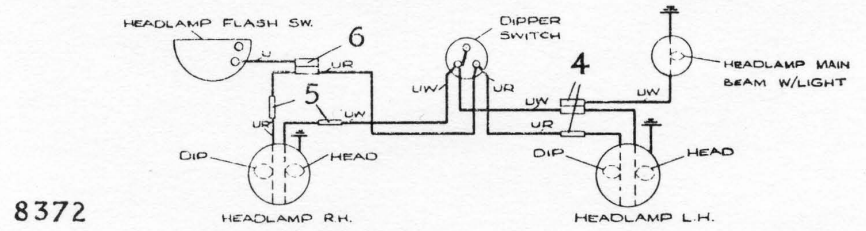

8372

WIRING OF HEADLAMPS W/LIGHT & FLASH SW FOR L.H.D.

A LIST OF SNAP CONNECTOR LOCATIONS IS SHOWN OVERLEAF FOR USE WITH THIS WIRING DIAGRAM

SUPER MINX

Sports Model

SNAP CONNECTOR LOCATIONS

1. Behind rear bumper
2. Under facia at left-hand side
3. Adjacent to panel lamp switch
4. On left-hand front wing valance
5. On right-hand front wing valance
6. Under facia near steering column
7. Under facia on right-hand side
8. Adjacent to wiper motor

THIS LIST IS TO BE USED IN CONJUNCTION WITH WIRING DIAGRAM SHOWN ON PREVIOUS PAGE

SCEPTRE

WIRING DIAGRAM

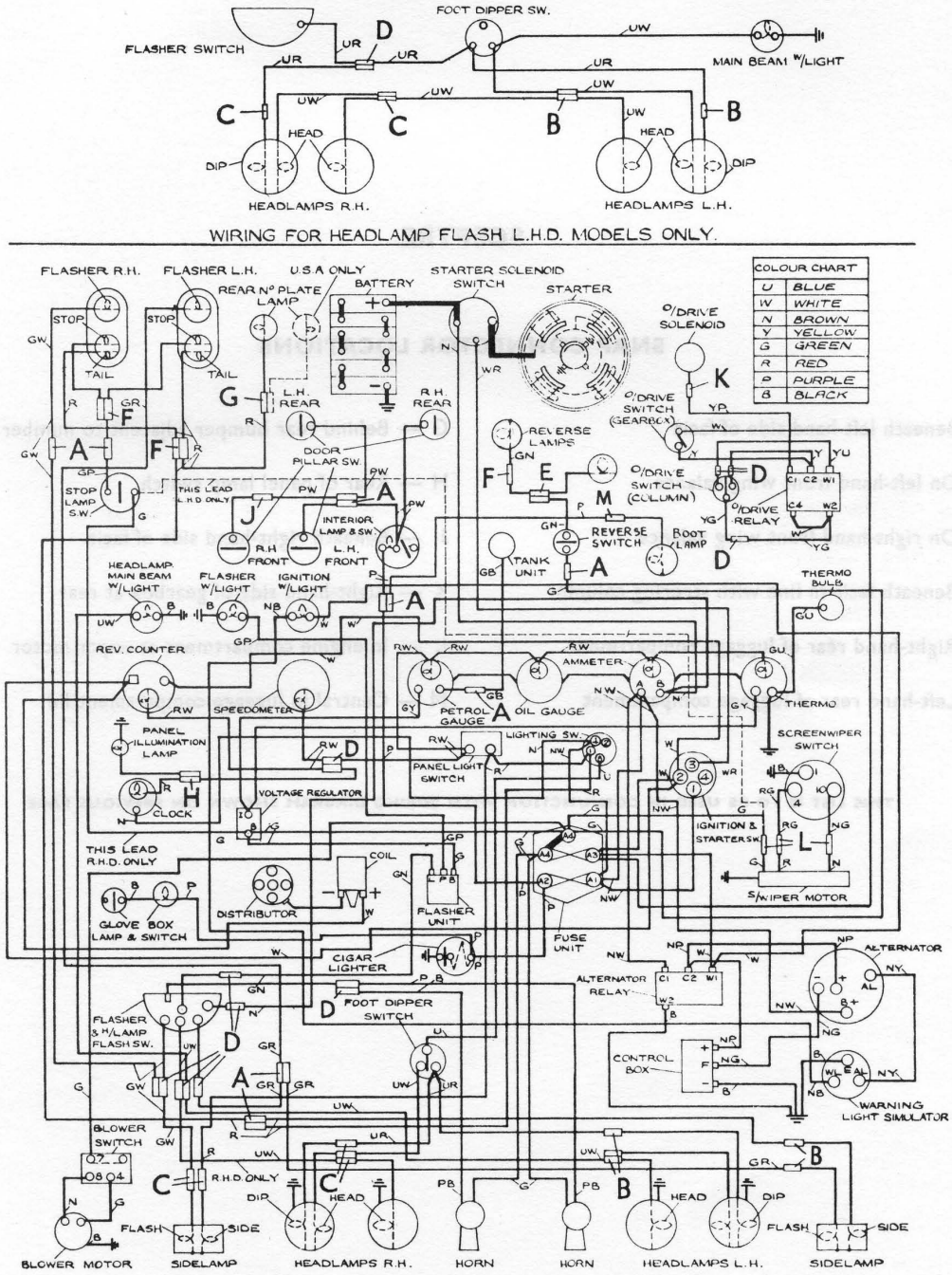

A LIST OF SNAP CONNECTOR LOCATIONS IS SHOWN OVERLEAF FOR USE WITH THIS WIRING DIAGRAM

SCEPTRE

SNAP CONNECTOR LOCATIONS

A — Beneath left-hand side of facia

B — On left-hand front wing valance

C — On right-hand front wing valance

D — Beneath facia in line with steering column

E — Right-hand rear of luggage compartment

F — Left-hand rear of luggage compartment

G — Behind rear bumper adjacent to number plate

H — Rear of panel lamp switch

J — Beneath right-hand side of facia

K — Right-hand side of gearbox at rear

L — In engine compartment at wiper motor

M — Central in luggage compartment lid

THIS LIST IS TO BE USED IN CONJUNCTION WITH WIRING DIAGRAM SHOWN ON PREVIOUS PAGE

VOGUE
WIRING DIAGRAM

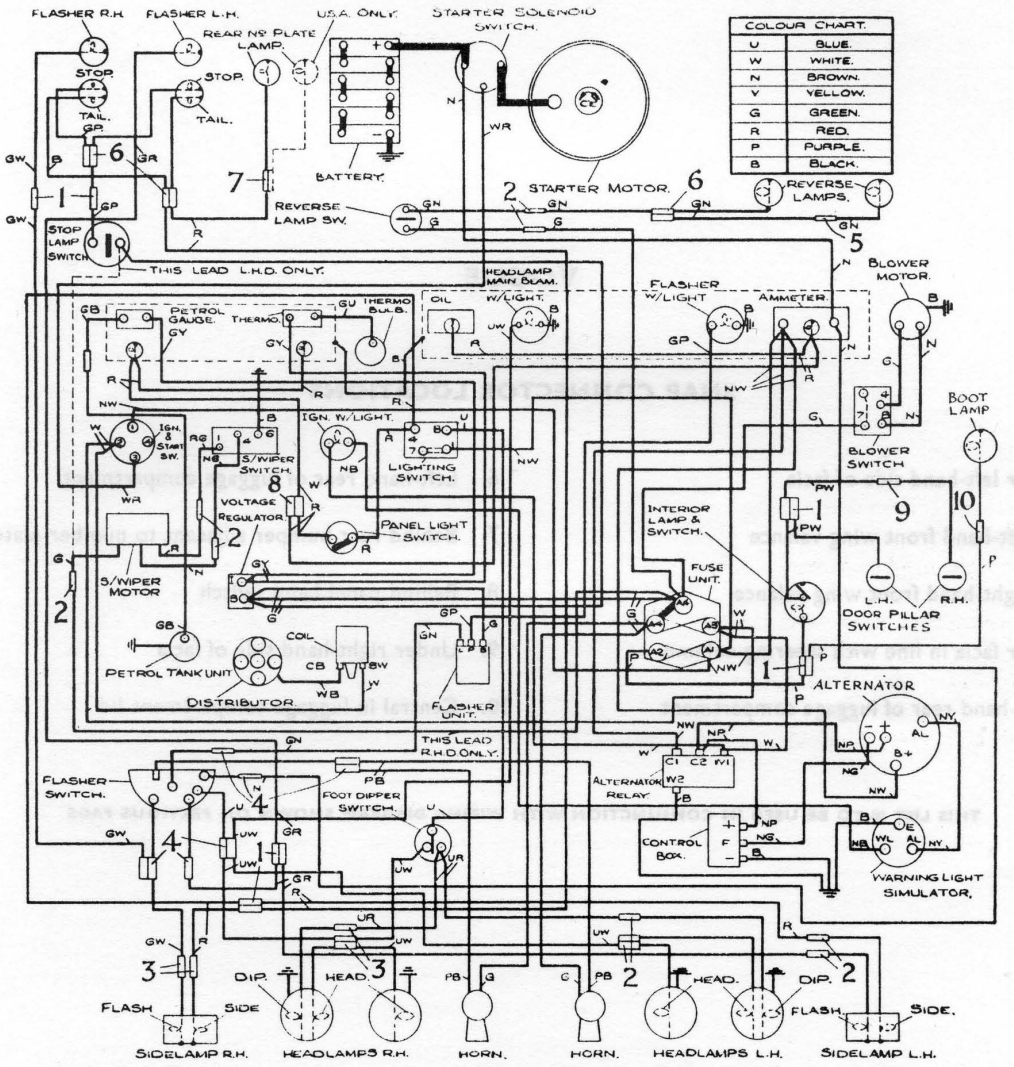

COLOUR CHART.	
U	BLUE.
W	WHITE.
N	BROWN.
Y	YELLOW.
G	GREEN.
R	RED.
P	PURPLE.
B	BLACK.

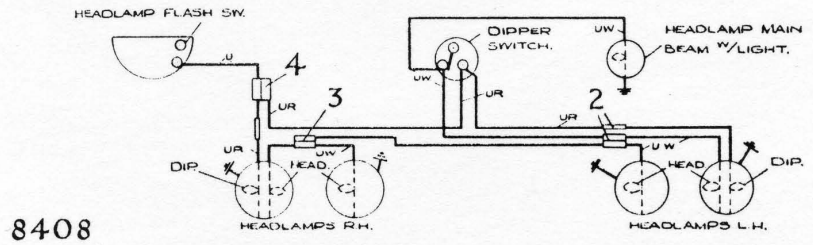

8408

WIRING OF HEADLAMPS W/LIGHT & FLASH SW. FOR L.H.D

A LIST OF SNAP CONNECTOR LOCATIONS IS SHOWN OVERLEAF FOR USE WITH THIS WIRING DIAGRAM