BRAKES

SECTION K2

CONTENTS

GIRLING BRAKES

GENERAL DESCRIPTION

These cars are equipped with Girling Brakes, disc brakes are fitted to the front wheels and drum brakes to the rear wheels. All four brakes are hydraulically operated, pressure being generated in the master cylinder by application of the brake foot pedal.

While the engine is running, this pressure is boosted by suspended vacuum servo unit to ensure light pedal pressure.

The handbrake operates the rear brakes only by an independent mechanical linkage.

MAINTENANCE

Maintenance checks will be required at regular intervals as given in the "Owner's Service Book" and will include the following:—

(i) Checking master cylinder fluid level.

(ii) Checking brake pads for wear and transposing to equalise wear.

(iii) Checking brake shoes for wear and cleaning out drums.

(iv) Checking flexible hoses for chafing, deterioration and leakage.

(v) Checking hydraulic pipes, connections, master cylinder calipers and wheel cylinders for leaks and damage.

(vi) Lubricating foot pedal pivot, handbrake lever and linkage.

(vii) Checking security of master cylinder, calipers, back plates, metal pipes and servo unit.

(viii) Checking caliper and wheel cylinder pistons for freedom of movement and corrosion.

(ix) Checking brake discs and drums for scoring.

(x) Renewing vacuum servo air cleaner, when applicable.

(xi) Renewing the brake fluid.

(xii) Renewing the flexible hoses and the seals in all hydraulic units.

Brake pad and shoe renewal

The brake pads should be renewed when the friction material has worn down to $\frac{1}{8}$ in. (3 mm.) thick and must be renewed when the minimum thickness of $\frac{1}{16}$ in. (1·6 mm.) is reached.

The brake shoes must be renewed when the linings have worn down to rivet level.

Front brake adjustment

The front brakes require no adjustment as the reducing thickness of the brake pads is automatically cancelled out by the fluid in the hydraulic system, thus the fluid level in the master cylinder reservoir will fall as the brake pads reduce in thickness.

Rear brake adjustment

Automatic

The rear brakes require no adjustment as the reducing thickness of the brake linings is automatically cancelled out each time the handbrake is applied.

Manual

The rear brakes require adjustment at intervals dependent upon conditions of usage. Refer to manually adjusted rear brakes—adjustment. See pages 29 and 30.

Brake fluid level

1. The brake fluid level in the master cylinder reservoir must be kept within $\frac{1}{2}$ in. (12 mm.) of the filler cap orifice.

2. Never fill the master cylinder reservoir completely since the expansion of the brake fluid, particularly in hot weather, may cause hydraulic pressure to build up and the brakes to bind.

3. Use only the recommended type of brake fluid, see under "Recommended Lubricants—Section P".

4. Exercise care not to spill any brake fluid on the car body as it is injurious to paintwork.

5. Before removing the filler cap from the master cylinder reservoir, clean the area around both components to prevent dirt entering the hydraulic system.

6. Ensure that the seal in the filler cap is in good condition and its air vent is unobstructed, as the obstruction may cause hydraulic pressure to build up and the brakes to bind.

7. The addition of brake fluid may be required to compensate the lowering of the fluid level due to the reducing thickness of the brake pads, but a sudden fall in fluid level will indicate a leak somewhere in the hydraulic system which must immediately be traced and rectified.

Renewing the fluid

1. Pump the old fluid from the hydraulic system by slackening off the bleed screw nearest to the master cylinder half to three-quarters of a turn and when the fluid ceases to flow retighten the bleed screw. Proceed with the next nearest and finish at the bleed screw furthest from the master cylinder in a similar manner. Discard all the old fluid.

2. Remove the master cylinder reservoir and wash out thoroughly with Girling Cleaning Fluid or Commercial Methyl Alcohol and dry off, see under "Master cylinder reservoir—To remove and refit".

3. Remove the calipers completely from the car, withdraw the two pistons from each and wash out thoroughly with Girling Cleaning Fluid or Commercial Methyl Alcohol and dry off, see under "Caliper—To remove and refit" and "To dismantle and reassemble".

4. Refill the master cylinder reservoir with the recommended brake fluid, see under "Recommended Lubricants—Section P" and bleed the hydraulic system of air, see under "Bleeding the hydraulic system".

Alternative method

Alternatively, the brake fluid can be renewed by continually topping up the master cylinder reservoir with fresh brake fluid above the recommended level and "bleeding" each bleed screw in turn until clean brake fluid is seen to flow from each bleed screw. It is **imperative** that air is not permitted to enter the hydraulic system by insufficient topping up, four depressions of the brake pedal will almost empty the master cylinder reservoir. It is **important** too that the brake pedal is depressed sharply but permitted to return unassisted after a short pause.

Flushing the hydraulic system

Renewing hoses and seals

When the hydraulic system has become contaminated with an incorrect fluid it must be flushed out immediately and refilled with fresh brake fluid of the recommended type. Should ever the contamination be caused by a mineral oil, in addition to the flushing, all hoses and seals must be renewed.

1. Pump the old fluid from the hydraulic system by slackening off the bleed screw nearest to the master cylinder half to three-quarters of a turn and when the fluid ceases to flow retighten the bleed screw. Proceed with the next nearest and finish at the bleed screw furthest from the master cylinder in a similar manner. Discard all the old fluid.

2. Remove the master cylinder reservoir and wash out thoroughly with Girling Cleaning Fluid or Commercial Methyl Alcohol and dry off, see under "Master cylinder reservoir—To remove and refit".

3. Remove the calipers completely from car, withdraw two pistons from each and wash out thoroughly with Girling Cleaning Fluid or Commercial Methyl Alcohol then dry off, see under "Caliper—To remove and refit" and "To dismantle and reassemble".

4. When there has been no contamination fill the master cylinder reservoir with Girling Cleaning Fluid or Commercial Methyl Alcohol and pump out through each bleed screw, while continuing to refill the master cylinder reservoir until at least a quart (1·1 litres) has passed through each bleed screw; discard all the old fluid.

5. When contamination has been experienced, remove the remaining hydraulic units, dismantle, clean, and refit new seals to all units, see under their respective headings. Wash out and dry off the metal pipes but **renew** all flexible hoses and the stop light switch.

6. Refill the master cylinder reservoir with the recommended brake fluid, see under "Recommended Lubricants—Section P" and bleed the hydraulic system of air, see under "Bleeding the hydraulic system".

Flexible hoses

The flexible hoses must be examined for chafing, general deterioration and leakage. When there is any doubt concerning the condition of the flexible hose it must be renewed. Should a flexible hose become blocked, it must never be cleared by probing but renewed.

SERVO AIR FILTER

The servo unit air filter element is of moulded cellular construction and must be renewed when soiled.

To remove and refit

1. Remove the cover by withdrawing the centre screw, discard the soiled filter element, clean the cover and rubber washer.
2. Position the rubber washer on the servo unit followed by the new element and secure the cover with the centre screw.

RENEWING SEALS AND REPLACEMENT SERVICE UNITS

When the hydraulic system has become contaminated with a mineral oil or the brake fluid, through old age, has become "gummy"; the seals in all the hydraulic units must be renewed.

The most satisfactory method of seal renewal or overhauling any unserviceable hydraulic unit is to renew it with a Replacement Service Unit available through the spares channels. Full details of this Service will be found in the "Parts List" under "Replacement Service Units".

In certain overseas territories this procedure may be impracticable or when the workshop available is up to the "Fuel Injection Equipment" standard of cleanliness, Service Kits containing the seals and, when necessary, tubes of lubricants, are available and can be used for the overhaul of all hydraulic units.

PREVENTIVE MAINTENANCE OF THE BRAKING SYSTEM

In order to maintain peak efficiency of the hydraulic system, the brake manufacturers recommend:—

(i) Brake fluid is renewed every 18 months or 24,000 miles (40,000 km.), whichever is the sooner.

(ii) Flexible hoses are renewed every 3 years or 40,000 miles (65,000 km.), whichever is the sooner.

(iii) Seals are renewed in all hydraulic units every 3 years or 40,000 miles (65,000 km.) or at the third change of brake pads, whichever is the sooner.

FRONT DISC BRAKES

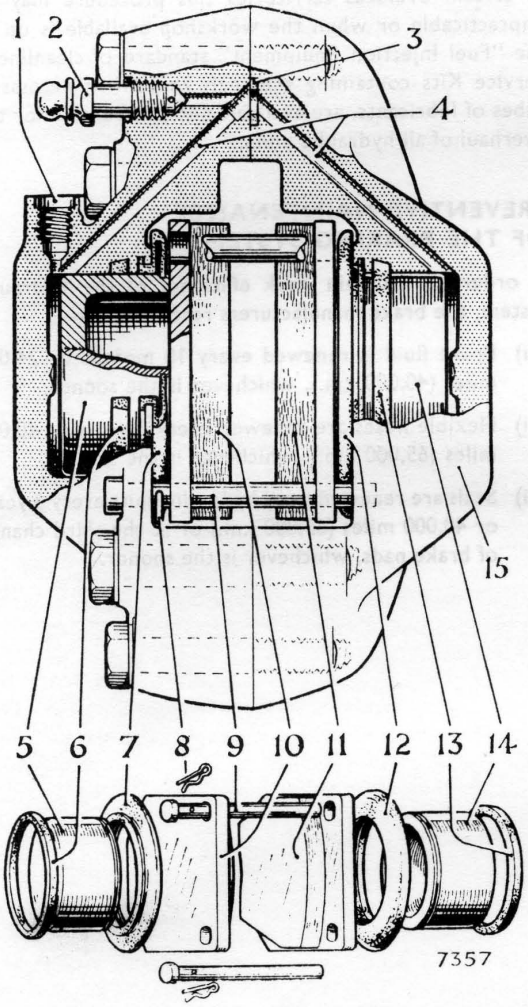

Fig. 1. *Exploded view of caliper assembly*

1.	FLEXIBLE HOSE CONNECTION
2.	BLEED SCREW
3.	FLUID CHANNEL SEAL
4.	INTERNAL FLUID CHANNEL
5. & 14.	PISTONS
6. & 13.	PISTON SEALING RINGS
7. & 12.	DUST COVERS
8.	RETAINING CLIPS
9.	RETAINING PINS
10. & 11.	BRAKE PADS
15.	CALIPER BODY

DESCRIPTION

Each front brake assembly consists of a disc which is attached to and rotates with the hub and a caliper mounted on the stub axle carrier which straddles the rotating disc.

The caliper houses two co-axially aligned pistons operating on a pair of brake pads, one each side of the disc. The brake pads are retained in the caliper by pins and spring clips. The pistons and bores are protected by dust covers fitted in the open end of the bores and fluid leakage is prevented by rubber sealing rings fitted in annular grooves machined inside the bores.

A metal splash guard, fitted on the stub axle carrier, protects the inner face of the disc from road dirt while its outer face is protected by the road wheel.

Application of the brake pedal generates pressure in the hydraulic system causing the pistons to apply equal pressure on each brake pad moving the latter into contact with the disc.

When the brake pedal is released, pressure on the brake pads collapses but the pistons and brake pads remain in position for the next brake application. In this manner brake pad wear is automatically taken up, thus no manual adjustment is necessary.

After negotiating a ford or water splash, or after driving on flooded roads it may be necessary to lightly apply the brakes a number of times in order to dry out the brake pads and discs to maintain full braking power. It is also advisable to do this after or during prolonged driving in wet weather, in circumstances when the brakes are not often in use, such as may occur on motorways, etc.

BRAKE PADS

The friction material of the brake pad is bonded and in some instances riveted to the backing plate and can therefore only be renewed by the fitment of complete brake pad assemblies.

To examine for wear

1. Apply the handbrake, jack up the front of the car and remove the front wheel.

2. Observe the thickness of the friction material of the brake pads and renew accordingly.

3. When it is observed that one brake pad has worn thinner than the other, normally the inner, and providing it is outside the specified minimum, the brake pads can be transposed across the disc, see under "Brake pads—To remove and refit".

To remove and refit (Fig. 1)

1. Apply the handbrake, jack up the front of the car and remove the front wheel.

2. Withdraw the two brake pads from the caliper by removing the two retaining clips and pins.

3. Refitting is the reverse of the removal sequence, but particular attention must be given to the following:—

   (i) Check the condition and fitting of the rubber dust covers and renew or refit as necessary, see under "Caliper—To dismantle and reassemble".

   (ii) Check the fluid level in the master cylinder reservoir to assess the possibility of overflowing when the pistons are pressed into their calipers. The overflowing can be staunched by wrapping the reservoir in an absorbent cloth or by syphoning off some of the fluid. Top up to correct level on completion of the brake pad change.

   (iii) Ensure that the brake pads, discs and calipers are free from dirt and grease.

   (iv) Pump the brake pedal until solid resistance is felt.

   (v) Do not make snap applications of the brakes or expect full braking power until the brake pads have bedded into the disc.

CALIPERS

To remove and refit

1. Apply the handbrake, jack up the front of the car and remove the front wheel.

2. Detach the caliper from the stub axle carrier by withdrawing two bolts and washers.

3. Suspend the caliper nearby without straining the flexible hose. When it is necessary to remove the caliper from the car, disconnect the pressure pipe from the flexible hose and remove the flexible hose from the support bracket, see under "Flexible hose—To remove and refit".

4. Refitting is the reverse of the removal sequence but particular attention must be given to the following:—

   (i) The longer bolt is fitted through the top lug of the caliper and through the rear lug of the steering arm.

   (ii) Bleed the hydraulic system of air when the caliper has been removed from the car, see under "Bleeding the hydraulic system".

   (iii) Pump the brake pedal until solid resistance is felt.

To dismantle and reassemble (Fig. 1)

1. Remove the two brake pads from the caliper by withdrawing two retaining clips and pins.

2. Clean off all road dirt from the caliper and pistons. **Do not split the caliper in two,** see under "Bridge bolts".

3. Withdraw the pistons, one at a time from the caliper, through the dust cover and remove the two dust covers from the open end of the piston bores.

4. Remove the two sealing rings from the piston bores using a plastic or wooden probe to avoid damaging the annular grooves.

5. Reassembly is the reverse of the dismantling sequence but particular attention must be given to the following:—

   (i) All parts must be meticulously cleaned and reassembled under equally clean conditions.

   (ii) Dry and coat the bores in the caliper, pistons and sealing rings with a liberal coating of brake fluid.

   (iii) Work the sealing rings into the large annular groove in the piston bores with the fingers.

   (iv) Insert the protruding lip of one dust cover into the groove in the open end of the piston bore; feed the piston, closed end first, through the dust cover into the bore to its fullest extent and fit the outer lip of the dust cover into the groove in the piston. Repeat with the second piston and dust cover.

Caliper bridge bolts

NO attempt must be made to remove the caliper bridge bolts joining the two halves of the caliper together. There is no point in doing so and in addition, the torque loadings to which the bridge bolts are tightened are critical.

When, in an emergency, the bridge bolts have been removed and, in the event of the fluid channel seal being undamaged, the caliper and bridge bolts must be scrupulously cleaned, dried and reassembled. Then, the bridge bolts tightened to the torque loadings given after the next paragraph. When reassembled, the caliper must be checked for fluid leaks under maximum pedal pressure while refitting it to the car by positioning a block of wood between the two pistons.

It must be understood that this will only provide a temporary remedy and the caliper must be returned to the manufacturers for overhaul at the first opportunity.

Bridge bolts—inner	60 lb. ft. (8·30 kg.m.)
Bridge bolts—outer	45 lb. ft. (6·22 kg.m.)

DISCS

Maximum run-out ·004 in. (·10 mm.)

The disc must be renewed when it has excessive run-out, suffered damage or become excessively scored.

Run-out

Excessive run-out of the disc causes the brake pads to knock the pistons back into the caliper and creates excessive pedal travel when the brakes are applied, thus it is important to keep the run-out to a minimum.

When the run-out exceeds the specified maximum, the disc can often be repositioned in relation to the hub to obtain a more satisfactory combination of manufacturing tolerances.

To check

1. Apply the handbrake, jack up the front of the car and remove the front wheel.
2. Prise off the hub cap, discard the split pin and tighten the castellated nut to a torque of 15—20 lb. ft. (2·07—2·76 kg.m.) whilst rotating the hub.
3. Mount a dial test indicator on the caliper or stub axle carrier so the stylus bears upon the disc approximately 1·00 in. (25 mm.) from the outer edge.
4. Rotate the disc and note the D.T.I. reading, when the "run-out" exceeds the specified maximum it may be sometimes reduced by repositioning the disc on the hub.
5. Set the hub endfloat, see under "Hub adjustment" in Section F.
6. Check the run-out as described in operations 3 and 4. Should the "run-out" exceed the specified maximum an investigation as to the condition of the hub bearings must be made.
7. Lock the castellated nut using a new split pin, fit the hub cap, front wheel and remove the jacks.

To remove and refit

1. Apply the handbrake, jack up the front of the car and remove the front wheel.
2. Remove the caliper from the stub axle carrier, see under "Caliper—To remove and refit", suspend nearby without straining the flexible hose.
3. Remove the disc and hub assembly from the stub axle, see under "Hubs—To remove and refit—Section F".
4. Remove the disc from the hub by withdrawing four bolts and washers.
5. Refitting is the reverse of the removal sequence but particular attention must be given to the following:—
   (i) Ensure the fitting faces of the hub and disc are free from dirt and burrs. In the instance of a replacement disc ensure that the protective coating is completely washed off.
   (ii) The four bolts are tightened to the torque given in the "General Data Section".
   (iii) The disc and hub assembly is refitted and the disc "run-out" checked, see under "Front hub—To remove and refit—Section F" and "Disc run-out—To check".
   (iv) Do not make snap brake applications or expect full braking power until the brake pads have bedded into the discs.

REAR DRUM BRAKES

DESCRIPTION

The rear brakes incorporate leading and trailing brake shoes operated by a single freely mounted wheel cylinder. Adjustment for lining wear is effected automatically each time the handbrake is applied by a pawl and ratchet mechanism incorporated in the wheel cylinder.

The two brake shoes are supported by platforms pressed in the back plate and spring loaded steady posts keep the brake linings parallel to the braking surface of the brake drum.

As hydraulic pressure is applied, the wheel cylinder piston moves the leading brake shoe outwards to the brake drum. As the leading brake shoe meets the brake drum, further movement of the wheel cylinder piston causes the wheel cylinder body to slide in the back plate and moves the trailing brake shoe outwards to the brake drum.

When the hydraulic pressure is released the pull-off springs return the brake shoes and wheel cylinder piston to their rest positions and the rotating brake drum centralises the brake shoes and wheel cylinder on the back plate.

BRAKE SHOES

The two brake shoes, known as leading and trailing, are fitted to each brake back plate and they are each steadied by a spring-loaded steady post.

The leading brake shoe is actuated by the piston of the wheel cylinder or handbrake lever while the trailing brake shoe is actuated by the reaction of the wheel cylinder body as its slides in the back plate slot.

Always fit factory-lined replacement brake shoes and new pull-off springs. These brake shoes have the correct type of lining which is ground accurately to size, thus ensuring an easy and quick bed-in to the brake drum.

To examine for wear

1. Chock the front wheels, release the handbrake, jack up the rear of the car and remove the rear wheel.
2. Remove the brake drum and distance piece from the hub by withdrawing a countersunk screw, clean all dust from the brake drum.
3. Observe the thickness of the brake lining above the rivets.
4. When they have worn down to rivet level, they must be renewed, see under "Brake shoes—To remove and refit".
5. Do not expect full braking power until the new brake linings have bedded into the brake drums.

To remove and refit (Fig. 2)

1. Chock the front wheels, release the handbrake, jack up the rear of the car and remove the rear wheel.
2. Remove the brake drum and distance piece, when fitted, from the hub by withdrawing a countersunk screw.
3. Withdraw the two brake shoe steady posts from the back plate by holding the head of the steady post and rotating the dished washer 90° and removing the spring and second dished washer.
4. Remove the toe end of the trailing brake shoe from the wheel cylinder tappet followed by the heel end from the fixed abutment, see Fig. 12.
5. The tension of the two pull-off springs is now released and the leading brake shoe can now be disengaged from the wheel cylinder lever.

   When the lining material has worn down to rivet level new brake shoes must be fitted.
6. Retain the piston and tappet within the wheel cylinder body by applying a rubber band.
7. Refitting is the reverse of the removal sequence, but particular attention must be given to the following:—
   - (i) Check the security of the back plate bolts.
   - (ii) Ensure that the wheel cylinder moves freely within the back plate slot; when this condition is evident, determine and eliminate the cause of the stiffness.
   - (iii) Smear the slots in the fixed abutment and tappet with Girling White Brake Grease; lubricate the threads of the tappet and adjuster wheel together with the body of the adjuster wheel, normally inside the wheel cylinder body, with molybdenum disulphide grease.
   - (iv) Free off the tappet in the adjuster wheel by turning it back 2½ turns after screwing it in to its fullest extent; this will ensure that the tappet is not threadbound, there must be as little friction as possible between these components.

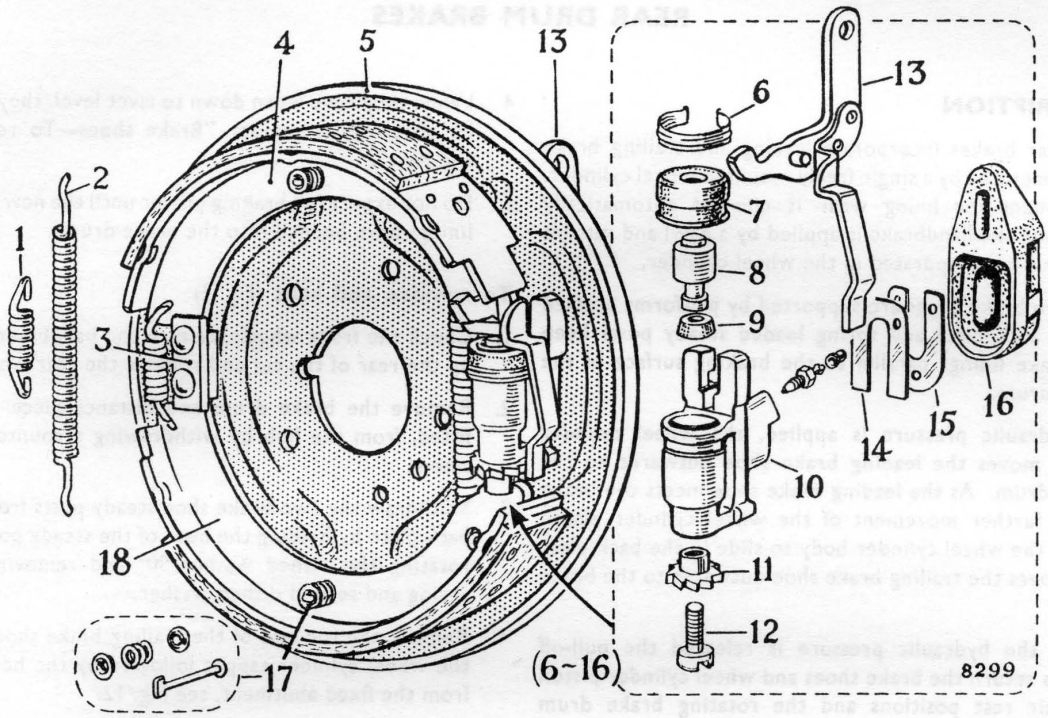

1. SHORT PULL-OFF SPRING
2. LONG PULL-OFF SPRING
3. FIXED ABUTMENT
4. LEADING BRAKE SHOE
5. BACK PLATE
6. CLIP
7. DUST COVER
8. PISTON
9. TAPERED SEAL
10. WHEEL CYLINDER BODY
11. ADJUSTER WHEEL
12. TAPPET
13. LEVER AND EXTENSION
14. SPRING PLATE
15. RETAINER PLATE
16. DUST COVER
17. STEADY POST
18. TRAILING BRAKE

Fig. 2. *Exploded view of left-hand rear brake back plate assembly*

(v) When fitting new brake shoes also fit new pull-off springs, the long spring is fitted between the back plate and the brake shoe webs.

(vi) Centralise the brake shoes on the back plate and rotate the adjuster wheel in the appropriate direction; the right-hand adjuster wheel has a right-hand thread while the left-hand adjuster wheel has a left-hand thread, to expand the brake shoes until there is just sufficient clearance to enable the brake drum to be fitted; this will minimise the initial adjustment.

(vii) Clean all dust from inside the brake drum and examine it for score marks, when the brake drum is badly scored it must be renewed.

(viii) Adjust the rear brakes by applying the hand-brake a number of times.

(ix) Do not expect full braking power until the brake shoes have bedded into the brake drums.

BRAKE ADJUSTING MECHANISM (Fig. 3)

The brake adjusting mechanism is incorporated in the wheel cylinder and actuated by an extension attached to the wheel cylinder lever; it consists of the following:—

(i) A tappet and adjuster wheel, freely mounted in the wheel cylinder body at the opposite end to the piston, ratchet type teeth are machined on the outer edge of the adjuster wheel.

(ii) A metal extension is attached to the wheel cylinder lever, the tip of which forms a pawl and rests on the peak of one adjuster wheel tooth.

(iii) A torsion type return spring mounted on a bracket welded to the outer face of the back plate, returns the wheel cylinder lever to the rest position.

When there is no lining wear and the handbrake is applied, the wheel cylinder piston will move the leading brake shoe into contact with the brake drum and the wheel cylinder body sliding in its slot will move the trailing brake shoe into contact with the brake drum.

Simultaneously with this movement, the tip of the wheel cylinder lever extension moves along the inclined face of the adjuster wheel ratchet teeth but without rotating it.

As lining wear takes place, the movement of the wheel cylinder lever and extension increases and its tip will rotate the adjuster wheel and extend the tappet to cancel out the lining wear.

On releasing the handbrake, the wheel cylinder lever will be returned to its rest position by the torsion spring and the extension will adopt its normal position on the peak of one ratchet tooth.

Initial adjustment

Periodical adjustment is unnecessary but adjustment will be required after any brake shoes have been refitted.

1. Apply the handbrake unhurriedly a number of times, to prevent unnecessary wear on the pawl and ratchet mechanism in the handbrake lever, the button on top of the lever can be depressed during the whole operation.

2. Stop when the handbrake lever reaches a constant height.

WHEEL CYLINDERS

The wheel cylinder consists of an alloy body, housing a piston and tapered seal which are protected by a rubber dust cover retained by a metal clip.

The wheel cyinder body adjacent to the head of the piston is built up to form a pivot for the lever of the handbrake. The longer and outer end of this lever is attached to the handbrake cable or brake rod while the short end locates an aperature in the toe end of the leading brake shoe web.

A tappet and adjuster wheel is fitted to the opposite end of the wheel cylinder body and with an extension on the wheel cylinder lever forms the self-adjusting mechanism.

The wheel cylinder is a sliding fit in the back plate thus facilitating centreing of the brake shoes. The wheel cylinder is located in its slot by spring and retaining plates fitted on to the neck of the wheel cylinder body as it protrudes through the back plate. The protruding portion of the wheel cylinder body contains two tappings, which accommodate the two pressure pipes or pressure pipe and bleed screw for right- and left-hand wheel cylinders respectively.

To remove and refit (Fig. 2)

1. Remove the brake shoes from the back plate, see under "Brake shoes—To remove and refit".

2. Detach the handbrake cable or rod from the wheel cylinder lever by withdrawing the spring clip from the clevis pin, removing the washers and clevis pin from the cable forkend or by discarding the split pin and releasing the spire clip on the outer end of the brake rod.

3. Withdraw the hydraulic pressure pipe(s) from the wheel cylinder by releasing the union nut(s) and remove the bleed screw as necessary, trapping any escaping fluid in a drip tray.

4. Remove the torsion spring from the wheel cylinder lever and backing plate bracket with a pair of pliers.

5. Remove the rubber dust cover, retainer and spring plates from the wheel cylinder lever and body; holding the wheel cylinder lever withdraw the wheel cylinder from the backplate slot, remove the wheel cylinder lever by moving it down into the back plate slot.

6. Identify the wheel cylinder left- or right-hand.

7. Refitting is the reverse of the removal sequence, but particular attention must be given to the following:—

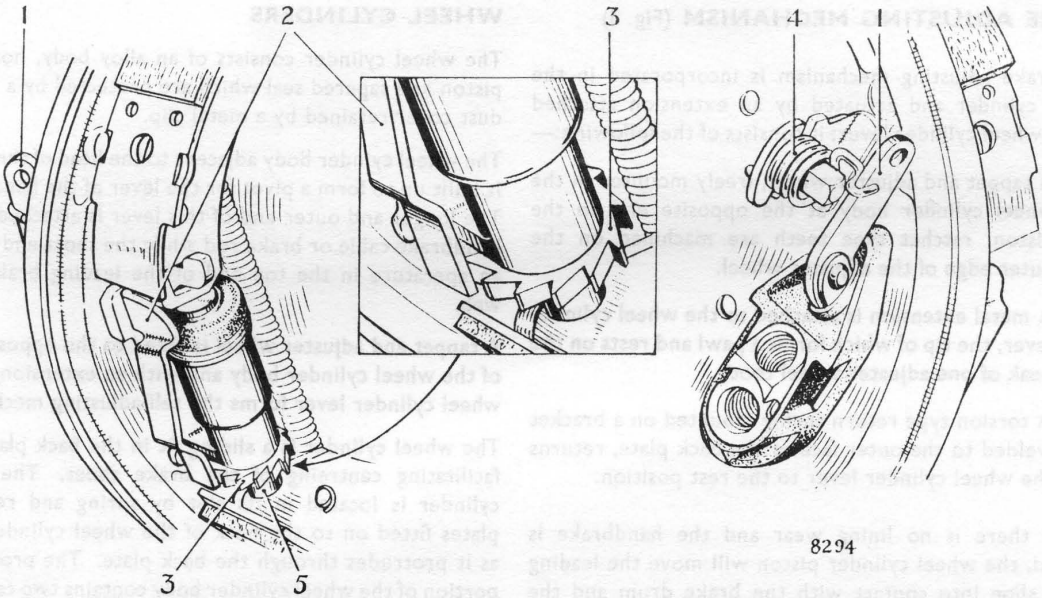

1. WHEEL CYLINDER LEVER
2. EXTENSION
3. ADJUSTER WHEEL
4. TORSION TYPE SPRING
5. TAPPET

Fig. 3. *Internal and external views of brake back plate showing self-adjusting wheel cylinder with an enlarged view of the wheel cylinder extension and adjuster wheel*

(i) Ensure that the wheel cylinder body has complete freedom of movement within the back plate slot, **this is important.**

(ii) Feed the wheel cylinder lever upward and into the back plate slot, feed the neck of the wheel cylinder body into the back plate slot and locate wheel cylinder lever pivot across the forked extension of the wheel cylinder body; fit the spring plate to the neck of the wheel cylinder body from the lever end, fit the retainer plate from the bottom end of the wheel cylinder neck and engage the pips of the spring plate.

(iii) Position the spring clip on the handbrake cable clevis pin towards the rear of the car or the spring clip above the brake rod and fit a new split pin.

(iv) Bleed the hydraulic system of air, see under "Bleeding the hydraulic system."

(v) Adjust the rear brakes, see under "Initial adjustment".

(vi) Check the handbrake adjustment, see under "Handbrake adjustment".

To dismantle and reassemble (Fig. 2)

1. Clean off all road dirt and when working on two or more wheel cylinders identify them, left or right-hand.
2. Withdraw the tappet and adjuster wheel from the wheel cylinder body by discarding the rubber band.
3. Remove the dust cover at the piston end by releasing the metal clip.
4. Eject the piston from the wheel cylinder body by applying low pressure air to the pressure pipe or bleed screw tappings.
5. Remove the tapered seal from the piston.
6. Reassembly is the reverse of the dismantling sequence, but particular attention must be given to the following:—
   (i) All parts must be meticulously clean and re-assembled in equally clean conditions.
   (ii) The tapered seal is fitted to the piston with a liberal coating of brake fluid and with the wider end of the taper away from the head of the piston.
   (iii) Smear the piston with Girling Red Rubber Grease and feed the piston and seal into the wheel cylinder body, exercising care not to damage the fine edge of the seal.
   (iv) Smear the inside edge of the dust cover with Girling Red Rubber Grease.
   (v) The adjuster wheel having the identification ring has a left-hand thread and with its tappet is fitted to the left-hand wheel cylinder; the plain adjuster wheel has a right-hand thread and with its tappet is fitted to the right-hand wheel cylinder.

BRAKE BACK PLATE

The brake back plate is a steel pressing suitable shaped to support the brake adjuster, steady posts, wheel cylinder and brake shoes. The back plate is mounted on the outer ends of the rear axle casing but cannot be removed without disconnecting the hydraulic system and removing the rear hub.

The left-hand back plate can be identified by the small cut-out in the axle casing aperture.

To remove and refit

1. Remove nave plate and slacken off the axle shaft nut.
2. Chock the front wheels, release the handbrake, jack up the rear of the car and remove the rear wheel.
3. Remove the brake drum and, when fitted, the distance piece from the hub by withdrawing the countersunk screw.
4. Detach the handbrake cable or rod from the wheel cylinder lever by withdrawing the spring clip from the clevis pin, removing the plain and spring washers and clevis pin from the cable forkend or by discarding the split pin and releasing the spring clip.
5. Disconnect the pressure pipe(s) from the wheel cylinder by releasing the union nut(s) and trapping any escaping fluid in a drip tray.
6. Remove the hub and key from the tapered end of the axle shaft by removing a nut and washer and fitting a suitable hub remover on the wheel studs, see under "Axle shaft—To remove and refit, Rear Axle, Section G".
7. Remove the back plate, oil catcher and sealing joints from the axle flange by withdrawing five nuts, washers and bolts; note the position and thickness of the sealing joints, see under "Axle shaft—To remove and refit, Rear Axle, Section G".
8. Refitting is the reverse of the removal sequence, but particular attention must be given to the following:—
   (i) Refit the sealing joints, one each side of the back plate as necessary, see under "Axle shaft—To remove and refit, Rear Axle, Section G".
   (ii) Position the head of the clevis pin above the handbrake cable forkend or the spring clip above the brake rod and fit a new split pin.
   (iii) Bleed the hydraulic system of air, see under "Bleeding the hydraulic system".
   (iv) Adjust the rear brakes, see under "Initial adjustment".
   (v) Check handbrake adjustment, see under "Hand-brake adjustment".

HYDRAULIC SYSTEM

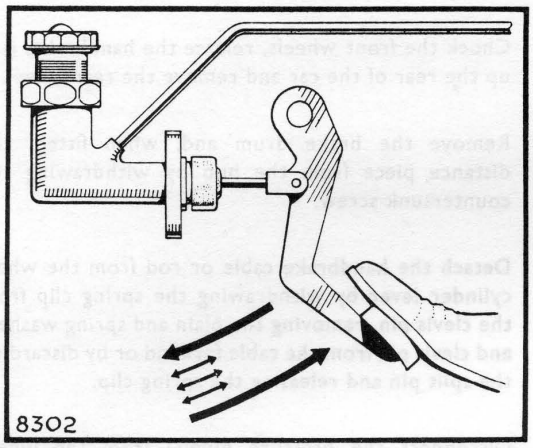

Fig. 4. *Indicating the long and short pedal strokes necessary to bleed the hydraulic system of air*

GENERAL

Great cleanliness is essential when dealing with any part of the hydraulic system and especially when the brake fluid is concerned. Dirty or aerated brake fluid must never be used in the hydraulic system, never use fluid which has been bled from the hydraulic system.

Use only the recommended type of brake fluid for topping up the master cylinder reservoir.

BLEEDING THE HYDRAULIC SYSTEM

Bleeding or expelling air from the hydraulic system is not a maintenance operation and will only be necessary when a portion of the hydraulic system has been disconnected or when the fluid level in the master cylinder reservoir has fallen so low that air has entered the system.

Always keep a careful check on the fluid level in the master cylinder reservoir during bleeding since it is most important that a high level of fluid is maintained. Should air enter the master cylinder from the reservoir, the complete operation must be repeated.

1. Destroy all vacuum in the servo unit by repeated operation of the brake pedal, otherwise difficulty will be experienced in completely expelling the air from the hydraulic system. **Do not** start the engine before bleeding the system has been completed.

2. Ensure that all hydraulic connections are secure and the master cylinder reservoir is filled with fluid which must be kept at a high level during the complete operation.

3. Remove the rubber cap from the bleed screw of the left-hand front caliper, fit the bleed tube and immerse the free end of the bleed tube in a glass vessel containing a small quantity of fluid.

4. Slacken off the bleed screw half to three-quarters of a turn and with an assistant depress the brake pedal a succession of long and short rapid strokes, i.e. the pedal depressed through its full stroke followed by two or three short rapid strokes and then allowed to fly back to the stop with the foot removed; any floor covering that prevents the full pedal stroke must be removed. Actuate the brake pedal in this manner until the fluid entering the glass vessel is free from air bubbles and then re-tighten the bleed screw on the next downward stroke of the brake pedal to the tightening torque given in the "General Data Section" (Fig. 4).

5. Remove the bleed tube and glass vessel from the bleed screw and refit the rubber cap.

6. Repeat the previous three operations with the right hand front caliper and finish with the wheel cylinder of the left-hand rear brake; the right-hand wheel cylinder has no bleed screw.

7. Top up the master cylinder reservoir to the correct level and refit the filler cap ensuring its seal is in good condition and its air vent is unobstructed, as an obstruction in the latter may cause pressure to build up and the brakes to bind.

Bleed screws

The calipers and wheel cylinder have conical ended bleed screws which bed on to a seat formed in the bottom of the bleed screw tapping in the body of that particular component.

The bleed screws must never be over-tightened since their threads may become stripped. Use only short spanners to tighten the bleed screws, the tightening torque is given in the "General Data Section".

Checking for leaks

1. Clean the connections, metal pipes and flexible hoses of all road dirt.

2. Start and run the engine when a vacuum servo unit is fitted.

3. Apply firm pressure to the brake pedal for a number of seconds while an assistant examines the connections, metal pipes and flexible hoses for leakage.

4. When leakage is observed at the connections, it may be necessary to dismantle the faulty connection to determine the cause, for tightening the bleed screw or union nut may only lead to stripped threads. Leaking metal pipes or flexible hoses must be renewed.

   After making any disconnections it will be necessary to bleed the hydraulic system of air, see under "Bleeding the hydraulic system".

BRAKE PIPE RUN

The pressure port of the master cylinder is connected by a metal pipe, which runs across the rear bulkhead, to the inlet port of the servo unit mounted in a rear corner of the engine compartment and the outlet port of the servo unit is connected by a second metal pipe to the top forward connection of the five-way connector mounted on the right-hand front wheel arch.

The centre connection of the five-way connector accommodates the stop light switch while the bottom forward and bottom rearward connections are connected by metal pipes and flexible hoses to the left- and right-hand front brake calipers respectively. The junctions of the metal pipes and flexible hoses, in addition to the metal pipe to the left-hand front brake caliper are supported in brackets and clips welded to the rear face of the front suspension crossmember.

The top rearward connection of the five-way connector is connected by a metal pipe, which passes through the wheel arch and runs rearward under the floor of the car to a flexible hose mounted in a bracket welded to the car floor.

The second end of the rear flexible hose is fitted in a support bracket welded on the rear axle casing which is connected by a short pipe to the lower tapping of the right-hand wheel cylinder. The upper tapping of this wheel cylinder is connected by a pipe which runs the width of the rear axle to the lower tapping of the left-hand wheel cylinder, the upper tapping accommodates the bleed screw.

The pressure pipes in the engine compartment, on the front suspension cross beam, under the floor and on the rear axle are attached by rubber sleeves and clips to absorb vibration which could result in possible fracture.

To provide the vacuum for servo assistance, the servo unit is connected to the engine inlet manifold by a flexible hose and a non-return valve.

Bending pressure pipes

The diameter of the pressure pipes is as follows:—

Pressure: From master cylinder to brake servo unit and from brake servo unit to calipers and wheel cylinders: $\frac{3}{16}$ in. diameter with $\frac{7}{16}$ in. 20 T.P.I. U.N.F. union nuts.

Should the pressure pipes be supplied in straight lengths, they must be shaped to follow the form of the original. In the event of the original being damaged beyond usefulness, a pattern must be made up from a length of heavy gauge malleable wire.

The new pipe length can easily be shaped with the fingers or on a pipe shaping "dolly" but in the absence of the latter, a piece of pipe similar in radius to the shape required can be used. To assist in forming the shape adjacent to the ends of the new length, a five-way connector can be screwed onto the union nut to provide a better grip.

Union nuts

The union nuts must never be overtightened since their threads may become stripped. Use only short spanners to tighten the union nuts, the tightening torque is given in the "General Data Section".

FLEXIBLE HOSES

To accommodate the constantly changing position of the front wheels and the rear axle whilst the car is moving, flexible hoses are used to connect the pressure pipes to the front calipers and the metal pipes mounted on the rear axle casing.

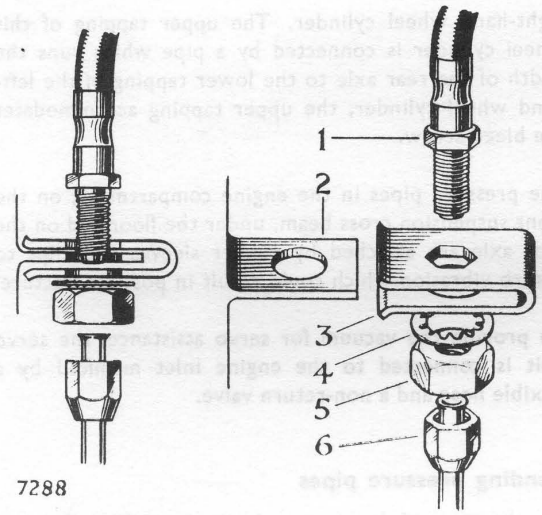

1. HOSE HEXAGON
2. SUPPORT BRACKET
3. LOCATING PLATE
4. WASHER
5. NUT
6. PRESSURE PIPE UNION NUT

Fig. 5. *Flexible hose connection. In some instances the locating plate (3) is omitted*

To remove and refit (Fig. 5)

1. Grip the hexagon of the flexible hose adjacent to the support bracket with a spanner, when a locating plate is fitted to the support bracket this spanner is unnecessary; detach the pressure pipe from the flexible hose by releasing the union nut and trapping any escaping fluid in a drip tray.

2. Still holding the hexagon of the flexible hose, withdraw the flexible hose from the support bracket by releasing the locknut and washer; when a locating plate is fitted, it is unnecessary to hold the flexible hose.

3. Remove the flexible hose and sealing washer from the brake caliper by applying a spanner to the hexagon at that end and permitting its entire length to rotate.

4. Refitting is the reverse of the removal sequence but particular attention must be given to the following:—

   (i) It is essential that the flexible hose is fitted to the brake caliper first and using a new sealing washer.

   (ii) Feed the end of the flexible hose into the support bracket, apply a spanner to the hexagon and set the run of the hose to clear all obstructions that could cause chafing. Secure the flexible hose to the support bracket with the washer and locknut and fit the pressure pipe to the protruding threaded end of the flexible hose with the union nut while holding the hexagon with the spanner to prevent the flexible hose from moving.

   When fitted, slide the locating plate onto the support bracket so the plain hole is on the pressure pipe side. Feed the end of the flexible hose into the locating plate and support bracket, locating the hexagon within the plate so the run of the flexible hose is clear of all obstructions that could cause chafing. Secure the flexible hose and fit the pressure pipe as described in the previous paragraph.

   (iii) Check that no chafing can occur under conditions of full bump and rebound by bouncing the body of the car up and down. In the instance of the front flexible hoses, position the front wheels on both full locks in addition to the straight ahead position.

   (iv) Bleed the hydraulic system of air, see under "Bleeding the hydraulic system".

MASTER CYLINDER RESERVOIR

Description

The master cylinder reservoir is fabricated from a translucent material and provides instant recognition of the fluid level without removing the filler cap.

The reservoir is screwed directly into the feed port in the end of the master cylinder. It is important to ensure that the filler cap seal is in good condition to prevent fluid leakage and the air vent holes are unobstructed for when these holes become obstructed pressure can build up in the hydraulic system and cause the brakes to bind.

To remove and refit

1. Unscrew the reservoir from the feed port in the front end of the master cylinder trapping the escaping fluid in a drip tray.

2. Refitting is the reverse of the removal sequence, but particular attention must be given to the following:—

   (i) The hydraulic system is bled of air, see under "Bleeding the hydraulic system".

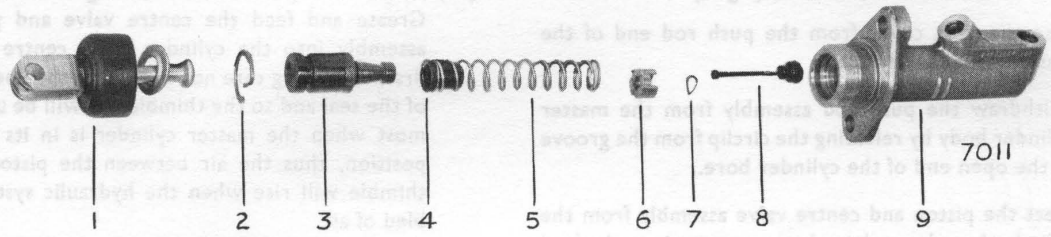

1. PUSH ROD
2. CIRCLIP
3. PISTON AND TAPERED SEAL
4. THIMBLE
5. PISTON RETURN SPRING
6. VALVE SPACER
7. SPRING WASHER
8. CENTRE VALVE AND SEAL
9. MASTER CYLINDER BODY

Fig. 6. *Exploded view of brake master cylinder*

MASTER CYLINDER

Description

The master cylinder is mounted inside the engine compartment on the rear bulkhead.

When pressure is applied to the brake pedal, the piston moves down the cylinder bore compressing the piston return spring against the centre valve and closes the seal over the feed port cutting off the supply of fluid from the master cylinder reservoir. Continued movement of the piston forces the fluid out of the pressure port through the servo unit to the front calipers and rear wheel cylinders and also keeps the centre valve hard on the feed port.

On the return stroke, the piston moves back along the cylinder bore and with the final movement of the piston lifts the centre valve off the feed port thus permitting the free flow of fluid between the master cylinder and its fluid reservoir.

To remove and refit

1. Destroy the vacuum in the servo unit by repeated operation of the brakes, otherwise difficulty will be experienced in completely expelling the air from the hydraulic system. DO NOT start the engine before bleeding the system has been completed.
2. Disconnect the pressure pipe from the master cylinder by releasing the union nut and trapping any escaping fluid in a drip tray.
3. Remove the pedal return spring cap from the master cylinder push rod by moving it forward away from the pedal lever and sliding the cap off the push rod.
4. Identify the position of the clevis pin in the pedal lever and detach the master cylinder push rod from the pedal lever by removing the spring clip, washer and withdrawing the clevis pin.
5. Remove the master cylinder and distance piece from the rear bulkhead inside the engine compartment by removing two nuts, washers and bolts which pass through the mounting flange and collect the pedal return spring from inside the car.
6. Refitting is the reverse of the removal sequence, but particular attention must be given to the following:—
   (i) The pedal lever has two push rod clevis pin holes and the push rod must be returned to its original position.
   (ii) The pedal lever is held rearwards, the pedal return spring is compressed while the spring cap is fed over the master cylinder push rod so its recessed face accommodates the forkend of the push rod.
   (iii) Bleed the hydraulic system of air, see under "Bleeding the hydraulic system".

To dismantle and reassemble (Fig. 6)

1. Ease the dust cover from the push rod end of the master cylinder body.

2. Withdraw the push rod assembly from the master cylinder body by releasing the circlip from the groove in the open end of the cylinder bore.

3. Eject the piston and centre valve assembly from the cylinder bore by applying low pressure air to the feed port in the end of the body.

4. Detach the centre valve assembly from the shouldered end of the piston by easing the leaf of the thimble upward clear of the piston shoulder.

5. Remove the thimble and piston return spring from the stem of the centre valve by compressing the return spring and passing the small end of the valve stem through the keyhole-shaped aperture in the thimble.

6. Withdraw the valve spacer and spring washer from the valve stem and ease the seal from the opposite side of the stem.

7. Ease the tapered seal from the shouldered end of the piston.

8. Reassembly is the reverse of the dismantling sequence but particular attention must be given to the following:—

   (i) All parts must be meticulously cleaned and reassembled under equally clean conditions.

   (ii) The seal is fitted to the centre valve, flat face first, with a liberal coating of brake fluid.

   (iii) The spring washer is fitted to the valve stem, domed face first, followed by the valve spacer so the "legs" encase the spring washer and seal.

   (iv) The piston return spring is fed onto the outside of the thimble and fitted to the valve stem, return spring first; the spring is compressed so the end of the valve stem can be locked in the keyhole-shaped aperture in the thimble, ensure that the piston return spring is located centrally on the valve spacer.

   (v) The tapered seal is fitted to the piston, flat face first and from the shouldered end of the piston with a liberal coating of brake fluid.

   (vi) The piston is fitted to the thimble, press the leaf downward so that the valve and piston assembly lock positively together.

   (vii) Smear the piston with Girling Red Rubber Grease and feed the centre valve and piston assembly into the cylinder bore, centre valve first, exercising care not to damage the fine edge of the seal and so the thimble leaf will be uppermost when the master cylinder is in its fitted position, thus the air between the piston and thimble will rise when the hydraulic system is bled of air.

   (viii) Smear the inside of the dust cover with Girling Red Rubber Grease and ensure that the circlip, which secures the push rod assembly, is fully engaged in its groove in the open end of the cylinder bore.

GIRLING SERVICE KITS

Girling Service Kits, containing the necessary seal(s) and a tube of Girling Red Rubber Grease, are available for all hydraulic units. The appropriate Service Kit must always be obtained when any seal(s) need renewing. Full instructions are included with the seal(s) but the following instructions should also be observed:—

1. When the hydraulic unit has been cleaned of road dirt and dismantled, the cylinder bore and internal parts must be cleaned with Girling Cleaning Fluid and allowed to dry off.

2. Examine the cylinder bore and piston(s); when the working surfaces are smooth to the touch, without corrosion, score marks or ridges, the new seal(s) can be fitted and the unit re-assembled. When there is any doubt as to the condition of the working surfaces, a new replacement hydraulic unit must be obtained.

3. All parts must be meticulously cleaned and reassembled in equally clean conditions.

4. Fit the new seal(s) to the cylinder bore, piston or valve with a liberal coating of brake fluid giving particular attention to the position of the seal lip which is towards the pressure or feed supply of the fluid.

5. Smear the piston(s) with Girling Red Rubber Grease and insert into the cylinder bore, exercising care not to damage or fold back the fine edge of the seal(s).

6. Smear the inside of the dust cover(s) with Girling Red Rubber Grease, fit to the cylinder body and secure with the metal clip as necessary.

HANDBRAKE

DESCRIPTION

The handbrake operates on the rear wheels only and consists of a hand lever, situated between the driver's seat and the door, with a cable and rod linkage connecting the hand lever to the two levers, one included in each wheel cylinder. The handbrake is automatically adjusted as the rear brakes are adjusted.

The handbrake cable is nylon lined and requires no lubrication.

The rear end of the handbrake inner cable terminates at the lever of one wheel cylinder while the rear end of the outer casing terminates in a clip welded on a brake rod connected to the opposite wheel cylinder lever with the inner end of the rod steadied by a bracket welded to the differential cover of the rear axle.

The wheel cylinder lever attached to the inner cable moves as the handbrake is applied and the opposite wheel cylinder lever, attached to the brake rod, moves due to the reaction of the handbrake cable outer casing. The inner ends of the wheel cylinder levers locate in apertures formed in the webs of the leading brake shoes, thus movement of these levers causes the leading brake shoes to move outwards to the brake drums. Further movement of the wheel cylinder levers causes the wheel cylinder bodies to slide in the back plate slots and move the trailing brake shoes outwards to the brake drums.

HANDBRAKE LEVER

To remove and refit (Fig. 7)

1. Chock the front wheels and release the handbrake.

2. Tilt the driver's seat forward and remove the handbrake lever shield from the door sill by withdrawing three screws.

3. Remove the handbrake lever from the door sill by withdrawing two bolts, washers and distance pieces; detach the cable from the bottom of the lever by withdrawing the spring clip from the clevis pin, removing the washer and clevis pin from the forkend.

4. Refitting is the reverse of the removal sequence but particular attention must be given to the following:—

   The distance pieces are fitted between the handbrake lever and door sill.

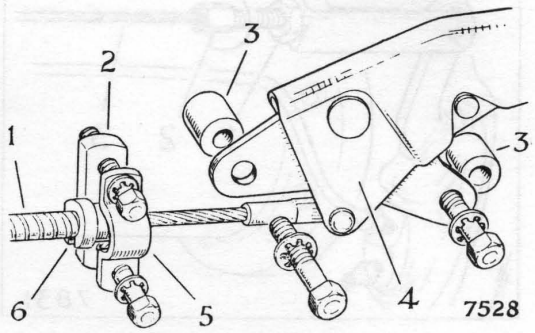

1. HANDBRAKE CABLE
2. DISTANCE PIECE
3. DISTANCE PIECE
4. HANDBRAKE LEVER
5. ABUTMENT CLIP
6. ABUTMENT BUSH

Fig. 7. *The handbrake lever; left-hand drive shown, right-hand drive symmetrically opposite*

HANDBRAKE CABLE

To remove and refit (Figs. 8 and 9)

1. Remove the handbrake lever from the door sill and cable, see under "Handbrake lever—To remove and refit".

2. Detach the handbrake cable from the door sill by withdrawing two bolts and washers from the abutment clip and distance piece, remove the abutment bush from the outer casing.

3. Withdraw the handbrake cable and floor grommet from beneath the car after removing the clip from the car frame by withdrawing a self-tapping screw.

4. Detach the handbrake cable from the wheel cylinder lever by withdrawing the spring clip from the clevis pin, removing the plain and spring washers and clevis pin from the forkend.

5. Remove the handbrake cable from the brake rod abutment by easing the rubber grommet from the end of the outer casing, then sliding the handbrake cable sideways and lifting the inner cable from the brake rod abutment.

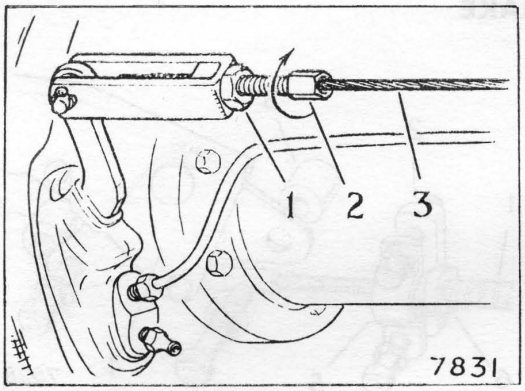

1. LOCKNUT
2. THREADED SLEEVE
3. INNER CABLE

Fig. 8

The handbrake cable adjuster; the arrow indicates the direction of rotation to shorten the cable. Right-hand drive shown, left-hand drive symmetrically opposite

6. Refitting is the reverse of the removal sequence but particular attention must be given to the following:—

   (i) The handbrake cable is fitted at the hand lever end first with the flange of the abutment bush away from the lever.

   (ii) Ensure that the rubber grommets are fitted to the floor and onto the rear end of the outer casing and the rubber sleeve under the frame clip.

   (iii) Position the spring clip of the handbrake cable clevis pin towards the rear of the car.

   (iv) When a replacement handbrake cable has been fitted, the handbrake operation is checked, see under "Handbrake—Adjustment".

HANDBRAKE ROD

To remove and refit

1. Chock the front wheels, release the handbrake and jack up the rear of the car.

2. Withdraw the brake rod from the wheel cylinder lever by discarding the split pin and releasing the spring clip.

3. Detach the rubber grommet from the end of the handbrake outer casing and move it along the inner cable.

4. Hold the brake cable outer casing with one hand, slide the brake rod abutment off the end of the outer casing and detach the brake rod from the inner cable through the slot in the abutment.

5. Withdraw the brake rod from the bearing inside the rear axle clip.

6. Remove the bearing from the rear axle clip when the hole has become elongated.

7. Refitting is the reverse of the removal sequence but particular attention must be given to the following:—

   (i) The spring clip is fed onto the brake rod so the double "prongs" point outward and when clipped over the wheel cylinder lever, the lever is between the short single "prong" and the double "prongs". Fit a new split pin.

   (ii) The rubber grommet is fitted over the end of the outer casing.

   (iii) When a replacement rod has been fitted, the handbrake operation is checked, see under "Handbrake adjustment".

Handbrake adjustment (Fig. 8)

Adjustment of the rear brakes will automatically adjust the handbrake and when the handbrake operation is correct there is four to six clicks of handbrake lever travel before the rear wheels are fully locked.

When, with the rear brakes correctly adjusted, excessive handbrake lever travel is experienced adjust the length of the handbrake cable as follows:—

1. Chock the front wheels, release the handbrake and jack up the rear of the car.

2. Remove the slackness from the handbrake cable by slackening off the locknut and rotating the threaded sleeve on the end of the handbrake cable clockwise, retighten the locknut.

3. Ensure that the brakes do not bind by rotating each rear wheel by hand.

4. Apply the handbrake, remove the jack and the chocks

BRAKE PEDAL ASSEMBLY

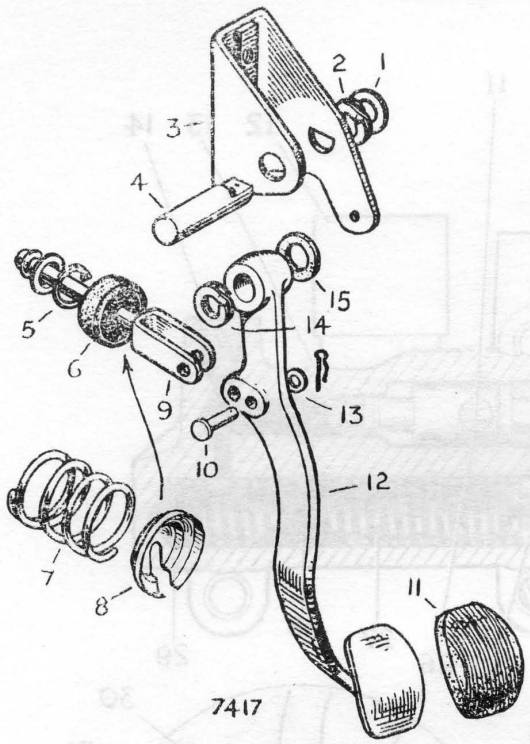

1. PLAIN WASHER
2. SPRING WASHER
3. PEDAL BRACKET
4. PEDAL SHAFT
5. CIRCLIP
6. RUBBER COVER
7. RETURN SPRING
8. CAP
9. PUSH ROD ASSEMBLY
10. CLEVIS PIN
11. PEDAL PAD
12. FOOT PEDAL
13. PLAIN WASHER
14. SPRING WASHER
15. FELT WASHER

Fig. 9. *The pedal assembly*

DESCRIPTION

The pedal assembly is of the pendulum type mounted in an individual bracket attached to the bulkhead inside the car. The master cylinder push rod can be attached to one or the other of the two holes in the pedal lever and this will affect the position of the pedal pad by approximately 1½ in. (4 cm.). The pedal return spring is mounted on the master cylinder push rod between the pedal lever and the bulkhead while the pedal stop is incorporated in the master cylinder.

To remove and refit

1. Identify the position of the clevis pin in the pedal lever and detach the master cylinder push rod from the pedal lever by withdrawing the spring clip from the clevis pin, removing the washer and clevis pin from the forkend.
2. Remove the pedal assembly from inside the car by removing the bolt and washer from the top of the bulkhead inside the engine compartment above the top master cylinder attachment and the top master cylinder nut, washer and bolt.
3. Refitting is the reverse of the removal sequence but particular attention must be given to the following:—
   (i) The pedal lever has two push rod clevis pin holes and the push rod must be returned to its original position.

To dismantle and reassemble (Fig. 9)

1. Withdraw the felt and spring washers from inside the pedal bracket by discarding the split pin and ejecting the pedal shaft and collecting the plain and spring washers from the "D"-shaped end of the shaft.
2. Remove the rubber pad from the pedal when it is seen to be well worn.
3. Reassembly is the reverse of the dismantling sequence but particular attention must be given to the following:—
   (i) The rubber pad is affixed to the pedal lever with a suitable adhesive.
   (ii) The spring and felt washers are positioned one each side of the pedal lever within the bracket.
   (iii) The pedal shaft is fed into the bracket and pedal lever "D"-shaped end first, so the flat on the shaft aligns with the flat in the opposite end of the bracket, to its fullest extent, the spring and plain washers fitted to the "D"-shaped end, use a new split pin.

GIRLING VACUUM SERVO UNIT

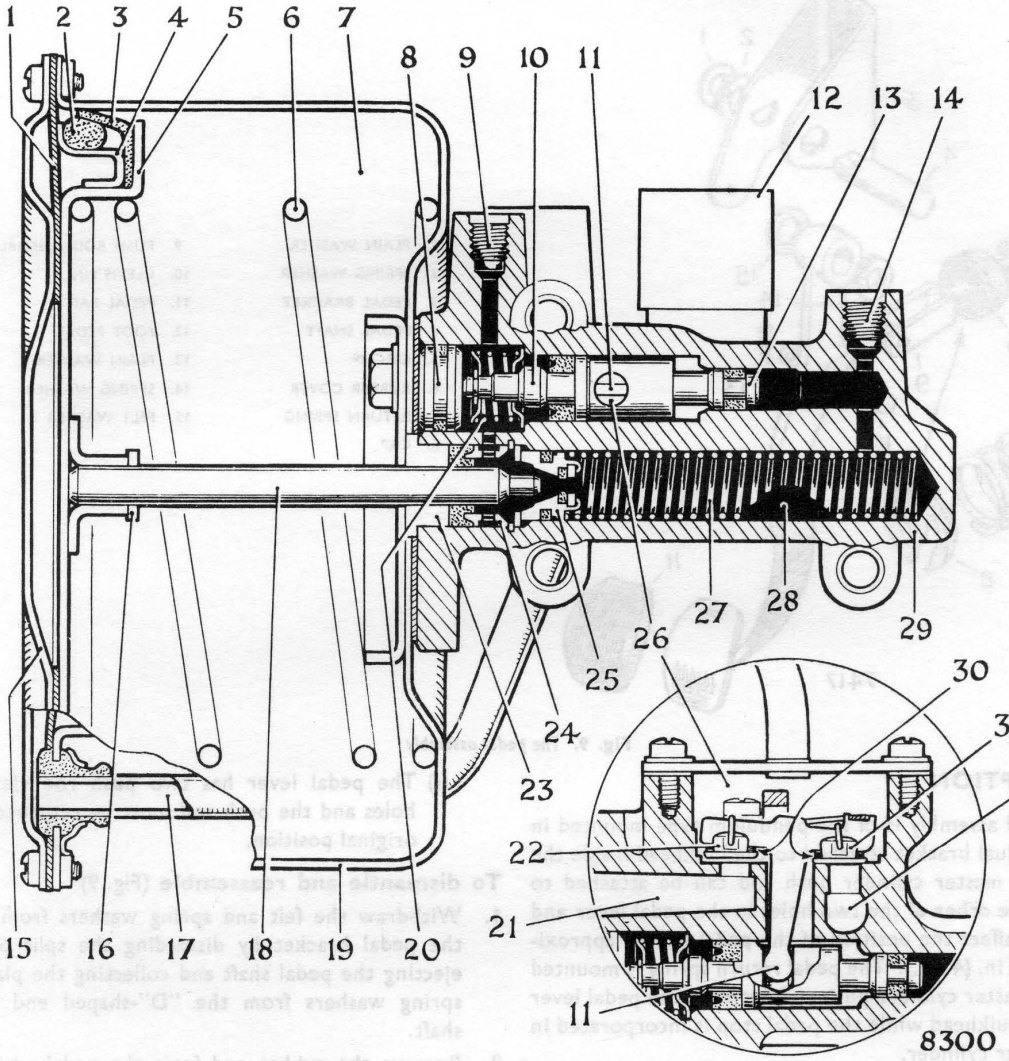

1. END COVER GASKET
2. PISTON BACKING RING
3. PISTON SEAL
4. PISTON SEAL RETAINER
5. PISTON
6. PISTON RETURN SPRING
7. CONSTANT VACUUM
8. END PLUG
9. HYDRAULIC INLET PORT
10. VALVE CONTROL PISTON, LOW PRESSURE END
11. "T" SHAPED LEVER
12. AIR FILTER ASSEMBLY
13. VALVE CONTROL PISTON, HIGH PRESSURE END
14. HYDRAULIC OUTLET PORT
15. END COVER
16. PISTON BUFFER
17. TRANSFER TUBE
18. PISTON ROD
19. VACUUM CYLINDER
20. CONTROL PISTON SPRING
21. VACUUM INLET
22. VACUUM VALVE
23. BEARING BUSH
24. NYLON SPACER
25. OUTPUT PISTON
26. VALVE CHEST
27. OUTPUT PISTON SPRING
28. OUTPUT CYLINDER
29. CAST BODY
30. VALVE SPRINGS
31. AIR VALVE
32. AIR INLET

Fig. 10. *Cross section view of Girling Vacuum Servo Unit*

GIRLING VACUUM SERVO UNIT

DESCRIPTION

The Girling Vacuum Servo Unit is installed in the brake hydraulic system between the master cylinder and the brake assemblies on the road wheels with the master cylinder pressure pipe connected to the vacuum servo unit and the servo hydraulic outlet is connected to the brake assemblies. The force required to augment the driver's effort is obtained by admitting atmospheric pressure to a vacuum cylinder containing a piston.

The pressure difference thus created across the piston produces a thrust load which is used to increase the hydraulic pressure available at the brake assemblies.

In the Girling Vacuum Servo Unit, the piston in the vacuum cylinder is normally subjected to vacuum on both sides and this principle is known as "Suspended Vacuum System". The vacuum is obtained from the inlet manifold of the engine and therefore servo assistance is only available while the engine is running.

Between the engine inlet manifold and the vacuum servo unit is a non-return valve which prevents air or petrol fumes entering the servo unit.

OPERATION (Fig. 10)

When air, at atmospheric pressure, is admitted to the vacuum cylinder (19) by a composite control valve the piston (5) drives the piston rod (18) and the output piston (25) down the hydraulic output cylinder (28) providing a considerable increase of hydraulic pressure to the brake assemblies on the road wheels.

The control valve, operated by hydraulic pressure from the master cylinder, exercises a precise control over the pressure increase and the brakes are applied exactly in proportion to the pressure applied to the foot pedal.

When the servo unit is at rest with no pressure in the hydraulic system, the vacuum valve (22) of the control valve is open and permits vacuum from the inlet manifold to temporarily communicate with the end cover side of the piston (5) in the vacuum cylinder (19) thus vacuum on both sides of the piston (5) is equal.

When pressure is applied to the brake pedal, hydraulic pressure is exerted throughout the braking system and equally on both ends of the valve control piston (10 and 13). As one end of this control piston is larger than the other, an equal pressure per square inch on both its ends causes a proportionally greater thrust to be exerted on the larger end moving the control piston and results in the "Tee"-shaped lever (11) opening the air valve (31) to the atmosphere and closing the vacuum valve (22).

Air is admitted to the end cover side of the piston (5) destroying the temporary vacuum, driving the piston (5) forward.

The piston rod (18) seals the centre hole in the output piston (25) and continued movement applies additional pressure to the hydraulic pressure proceeding to the brake assemblies and also to the small end of the valve control piston (13).

The movement of the output piston (25) continues until the thrust on the small end of the valve control piston (13) by the higher pressure to the brake assemblies, overcomes the thrust on the large end of the control piston (10), by the lower pressure from the master cylinder. The valve control piston (10 and 13) is thus moved back and closes the air valve (31); at this point both valves are closed and the brakes held on.

When the brake pedal is released the lower pressure from the master cylinder is reduced at the large end of the valve control piston (10) which moves back towards its rest position causing the "Tee"-shaped lever (11) to open the vacuum valve (22) drawing the air from the end cover side of the piston (5) in the vacuum cylinder (19), the piston (5) returns to its rest position and with it the output piston (25) relieving the hydraulic pressure in the brake assemblies. The piston rod (18) is withdrawn from the centre hole in the output piston (25) allowing a flow of hydraulic fluid between the brake assemblies and the fluid reservoir of the master cylinder.

If the brake pedal pressure was increased instead of being decreased the control valve operates to give additional assistance until the thrust on each end of the valve control piston is balanced or until the limit of available vacuum is reached. Conversely, if the pedal pressure is only reduced, the control valve operates to reduce the hydraulic pressure in the brake assemblies until, again, a state of balance of the valve control piston is reached.

SERVICING

Whenever possible the Girling Vacuum Servo Unit should be returned to the manufacturers for replacement but if this is not possible the renewing of all seals as contained in the Service Kit should provide a satisfactory unit providing **the internal working surfaces are in good condition.**

There should be no sign of corrosion, pitting, scoring or steps on the piston rod, pistons or bores and the surfaces should be smooth to the touch.

When dismantling, absolute cleanliness is essential. Wash the hands and lay out a clean sheet of paper on which to work and place the parts. Take care of all highly finished working surfaces on pistons, rods and bores. Clean hydraulic parts with Girling Cleaning Fluid or Commercial Methyl Alcohol and do not allow any other fluid, oil or grease to touch them. Special care should be exercised when removing or refitting the circlip in the hydraulic output cylinder and when reassembling the vacuum cylinder to the body.

To remove and refit

1. Remove the flexible vacuum hose from the top of the servo unit by withdrawing the banjo bolt and collecting two sealing washers.

2. Detach the two pressure pipes from the servo unit by releasing the union nuts and trapping any escaping fluid in a drip tray.

3. Detach the band round the vacuum cylinder from the bracket by removing a nut, washer and bolt.

4. Remove the servo unit from the mounting bracket by withdrawing three bolts and washers. No useful puspose is served by removing the brackets.

5. Refitting is the reverse of the removal sequence but particular attention must be given to the following:—

   (i) Check that the two brackets are secure.

   (ii) The vacuum pipe is secured with a new sealing washer each side of the banjo connection.

   (iii) The hydraulic system is bled of air, see under "Bleeding the hydraulic system" before the engine is started.

To dismantle and reassemble

1. Grip the servo unit in a vice by the two lower lugs on the cast body.

2. Remove the piston assembly (5) spring (6) gasket (1) and end cover (15) from the vacuum cylinder (19) by removing the transfer pipe retaining plate and seven nuts and bolts while controlling the pressure of the spring (6).

3. Remove the vacuum cylinder (19) and gasket from the cast body (29) by withdrawing three bolts, washers and a clamping plate and easing the grommet in the flange of the cylinder from the transfer pipe (17).

4. Remove the cover and transfer pipe (17) from the valve chest (26) by withdrawing four screws and washers.

5. Remove the valve retainer and flat horseshoe spring from inside the valve chest (26) by withdrawing two screws.

6. Withdraw the valves (22 and 31) and "Tee"-shaped lever (11) complete from inside the valve chest (26) by applying light pressure to the plug (8) in the end of the control piston bore.

7. Remove the cast body (29) from the vice and withdraw the control piston assembly from the top bore by tapping the mounting flange of the cast body on a wooden block.

8. Dismantle the control piston assembly by compressing the piston spring, easing off the circlip and removing the spring and retainers.

9. Remove the two seals from the control piston and one from the plug (8).

10. Withdraw the piston rod bearing bush (23) from the output piston bore and using a hooked tool remove the gland seal beneath followed by the nylon spacer (24).

11. Mount the cast body vertically in the vice by one of the mounting lugs and fit the compression tool to press the output piston (25) into the bore.

12. Using circlip pliers fully compress the circlip in the bore and carefully lift out the circlip exercising great care not to damage the bore, otherwise a brake failure may result.

13. Release the compression tool when the piston spring (27) will push out the washer followed by the output piston (25) the latter is then discarded.

14. Reassembly is the reverse of the dismantling sequence but particular attention must be given to the following:—

(i) All seals must be renewed and lubricated with Girling Brake Fluid; lubricate the bores and pistons with Girling Red Rubber Grease.

(ii) Fit a new output piston (25) as the piston rod seal can only be fitted during manufacture and confirm that the taper seal has the larger diameter nearer the reduced end of the piston.

(iii) Fit the spring (27) to the output piston (25) feed both into the bore, spring first, followed by the washer and hold in position with the compression tool and clip the tool under the mounting flange of the cast body (29).

(iv) Ensure that the circlip does not foul the side of the cylinder and fits snugly into its groove; this operation must be unhurried and the circlip pliers must be secure in the circlip, for any damage to the cylinder can result in brake failure. Remove the compression tool from the cast body.

(v) Fit the nylon spacer (25) into the bore, large end first, followed by the gland seal, lip end first, and finally fit the bearing bush (23).

(vi) Fit the control piston to the bore so the transverse hole aligns with the hole in the valve chest (26).

(vii) It is unlikely that the two nylon valves (22 and 31) will need renewing but when it is necessary their faces should be lapped on a piece of glass with a fine lapping paste to ensure they are airtight.

Fit the valves (22 and 31) and "Tee"-shaped lever (11) complete so the horsehoe spring location above the air valve (31) is away from the two securing screws inside the valve chest (26). It will be necessary to compress the end plug (8) to locate the end of the "Tee"-shaped lever (11) in the control position.

(viii) Fit a new rubber grommet in the flange of the vacuum cylinder (19) and locate a new gasket on the mounting face of the cast body (29).

(ix) Fit the vacuum cylinder (19) and clamping plate with the centre hole of the cylinder over the protruding bearing bush (23) and transfer pipe (17) ensuring there will be space over the grommet for the passage of air when the end cover (15) is fitted but leave the three bolts slack.

(x) Position the piston (5) and return spring (6) inside the vacuum cylinder (19) and push it down through the full stroke several times to align the bearing bush (23); remove the piston (5) and return spring (6) and tighten the three cylinder attachment bolts taking care not to displace the vacuum cylinder (19) on the flange of the cast body (29). If the cylinder is displaced it can cause the brakes to "hang-on".

(xi) Remove the sponge rubber backing ring (2) from the piston flange and fit the new one from the service kit. Smear the special lubricant, supplied with the kit, on the leather seal (3) of the piston (5).

(xii) Smear the piston rod (18) with Girling Red Rubber Grease and with the return spring in front offer up the assembly to the vacuum cylinder (19).

(xiii) Position the end cover (15) with a new gasket (1) on top of the piston (5) and press down, taking care the piston rod (18) enters the bearing bush (23) without damage.

(xiv) Secure the end cover (15) with the nuts and screws.

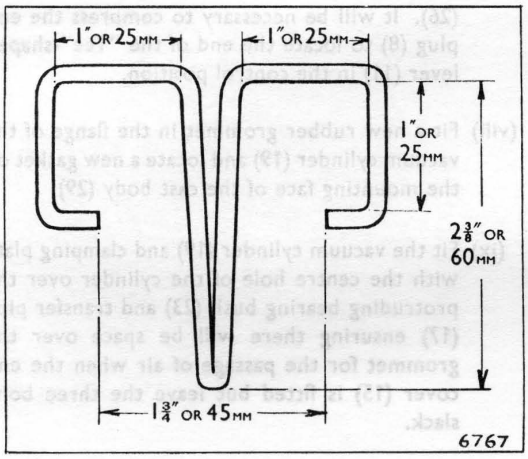

Fig. 11. *The compression tool*

COMPRESSION TOOL (Fig. 11)

The compression tool, necessary to compress the output piston, is made from a 12 in. (30 cm.) length of ⅛ in. (3 mm.) diameter iron wire.

Bend the wire back on itself in the centre to make the middle "leg" of the tool. Follow with the six other bends as shown in the illustration, finally cutting the two ends so there is 1¾ in. (45 mm.) between them.

The centre "leg" is inserted into the output cylinder bore and pressed down until the two ends can be sprung apart and clipped under the mounting flange of the cast body. The tool is then pushed aside towards the control cylinder bore to allow room to insert the circlip pliers.

TESTING EQUIPMENT

To make comprehensive tests, of the vacuum servo unit, requires complex and expensive equipment and this kind of testing is outside the capacity of many Service Workshops. A number of simple tests can be made when the servo unit is installed which gives some useful information and these tests are described hereafter. The only piece of equipment required is a ⅜ in. × 24 U.N.F. pipe union to fit into the hydraulic inlet port.

The use of these tests will assist in diagnoses and will provide assurance after servicing, but the tests are not exhaustive and so cannot equal the standard of the testing which is done in the factory by the specially designed equipment. When a vacuum servo unit gives cause for doubt it is always best to replace it with a factory tested unit whenever possible.

It is assumed that any faults connected with the brake system, such as fluid contamination, lack of adjustment, air in the hydraulic system, fluid leaks, etc., have been recognised and eliminated.

Test 1

1. Fit the servo unit to the mounting bracket and before connecting the air or fluid pipes, fit a bleed screw to the fluid outlet port and the special adaptor to the fluid inlet port.
2. Connect the vacuum pipe from the engine inlet manifold to the adaptor and remove the air filter element.
3. Start the engine and while "ticking over" place the fingers over the air inlet port of the air filter and the vacuum port to determine if there is any suction at either orifice, no suction should be experienced.
4. When suction can be detected, it indicates that the bores are scored or the components incorrectly assembled.
5. Remove the adaptor.

Test 2

1. Connect the vacuum pipe from the inlet manifold to the vacuum port.
2. Connect the fluid inlet and outlet pipes to their respective ports and bleed the hydraulic system of air.
3. Start and run the engine. While the brake is being applied, it should be possible to hear the hiss of the air inlet and with the hand on the vacuum cylinder feel the movement of the piston inside the vacuum cylinder.

Test 3

1. Start and run the engine for half a minute then switch off and leave for two minutes.
2. Apply the brake and the servo unit should operate and the operation should be detected as described in Test 2.

Test 4

Start and run the engine, apply the brake hard and hold it on for fifteen to twenty seconds. There should be no perceptible creep in the brake pedal.

If there is any creep, it indicates leaks or scored bores in the components.

Test 5

1. Jack up the front road wheels.
2. Start and run the engine.
3. Apply the brake and release.
4. The front road wheels should be free to move half a second after the release of the pedal.

Tests 2 to 5 can be used to test a suspect Vacuum Servo Unit before it is removed from the car.

IF THE RESULT IS UNSATISFACTORY ON:—

Test 2. It means the servo unit is not working at all, which could be caused by a lack of vacuum, possibly a faulty non-return valve, or a fault within the servo unit.

Test 3. It indicates leaking gaskets, air valve or rubber grommet. Clamp the vacuum hose and repeat Test 3. If satisfactory, the non-return valve is faulty. To test for a leaking air valve run the engine and place the finger over the air inlet. If the suction is only slight the air valve is satisfactory and the leak is elsewhere.

Test 4. The source of the trouble can only be found by elimination. Check for leaks. If no leak of hydraulic fluid is evident clamp each hose successively and repeat the test each time. Finally plug the master cylinder outlet and test. If creeping of the pedal is evident when the hoses are clamped and the pedal is solid when the master cylinder outlet is plugged, the servo unit is faulty.

Test 5. If the brakes remain on, disconnect the vacuum pipe, operate the brakes to eliminate all the vacuum in the servo unit and repeat the test. If the brakes remain on, the fault is not in the servo unit. If the brakes now release normally, the fault is in the servo unit and the alignment of the piston in the vacuum cylinder is suspect.

VACUUM NON-RETURN VALVE

A vacuum non-return valve is included in the banjo connection situated on top of the servo unit. Since it is not possible to dismantle the non-return valve, in the event of failure it must be renewed.

Its purpose is to preserve the vacuum in the servo unit and to prevent damage to it in the event of an engine backfire.

It consists of a spring-loaded valve which, in normal conditions, will be open due to the vacuum from the engine inlet manifold. When the vacuum from the inlet manifold becomes insufficient to preserve the vacuum in the servo unit, the spring-loaded valve will return to its seat.

To remove and refit

1. Remove the banjo connection and two copper washers from the top of the servo unit by withdrawing the banjo bolt.
2. Withdraw the banjo connection from the flexible hose by slackening off the hose clip.
3. Refitting is the reverse of the removal sequence but particular attention must be given to the following:—
   (i) The two copper washers, one each side of the banjo connection are not omitted.

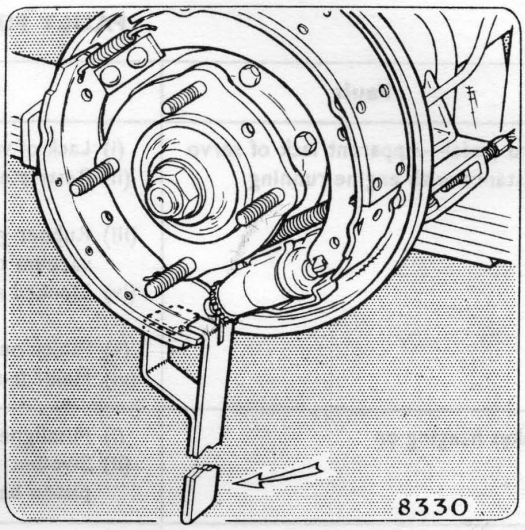

Fig. 12. *The Girling shoe horn applied to the toe end of the trailing brake shoe*

GIRLING SHOE HORN (Fig. 12)

The shoe horn, for the removal and refitting of the brake shoes, is marketed by Messrs. Girling Limited under Part number 64947013.

The shoe horn is applied to the toe end of the trailing brake shoe and levered forward as shown in the illustration to disengage or engage the brake shoe web in the slot of the tappet.

FAULT FINDING CHART

Fault	Cause	Action
Hard pedal—Apparent lack of servo assistance with engine running	(i) Lack of vacuum (ii) Restricted hose (iii) Rubber grommet in flange of vacuum cylinder (iv) Blocked air filter (v) Faulty output piston (vi) Major fault in servo unit	(i) Check vacuum connections (ii) Check hose and renew if necessary (iii) Fit new parts from Service Kit (iv) Examine air filter element and renew if necessary (v) Fit new parts from Service Kit (vi) Fit new servo unit
Brakes hanging on	(i) Misaligned vacuum piston (ii) Swollen rubber grommet or piston backing ring	(i) Check as Test No. 5 (ii) Fit new parts from Service Kit
Slow action of servo unit	(i) Swollen rubber grommet in flange of vacuum cylinder (ii) Blocked filter or restricted air inlet	(i) Fit new parts from Service Kit (ii) Examine air filter element and renew as necessary
Lack of servo assistance on heavy braking	Leak in servo vacuum	Check for leaks
Loss of fluid	(i) Failure of seal or seals (ii) Scored bore	(i) Fit new parts from Service KIt (ii) Fit new servo unit

MANUALLY ADJUSTED REAR BRAKES

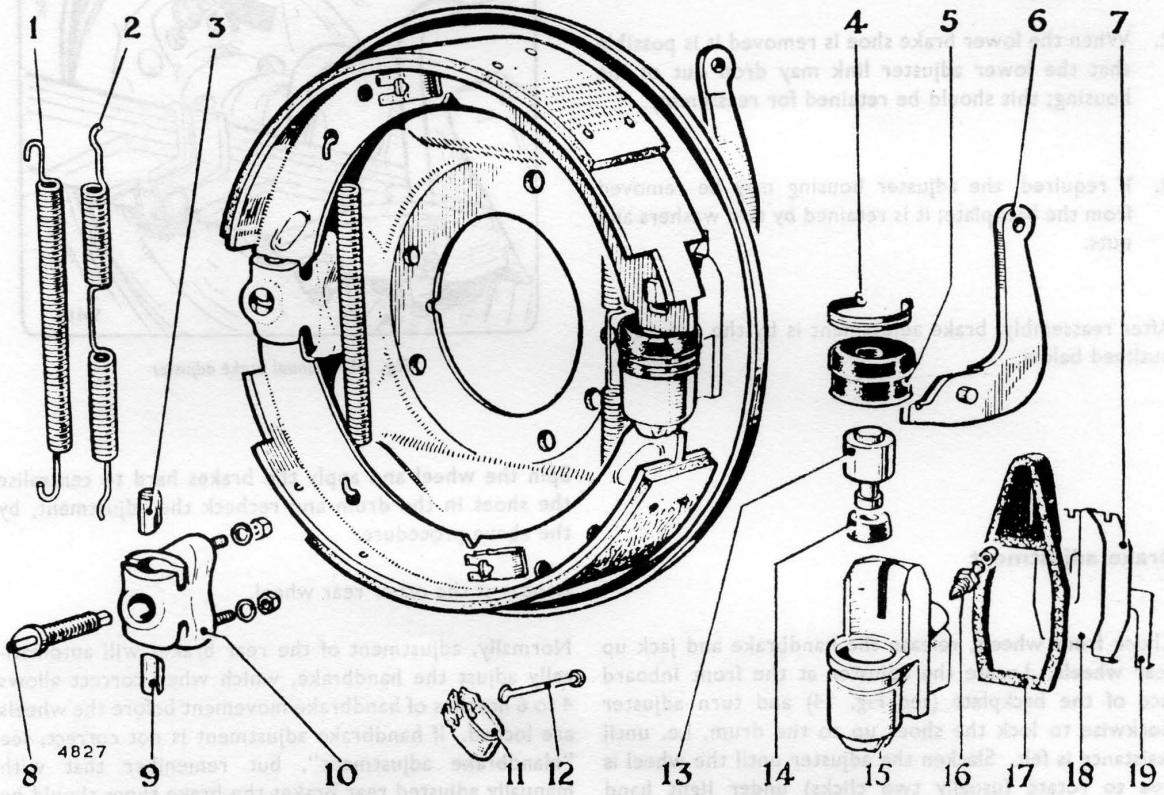

1. RETURN SPRING
2. RETURN SPRING
3. ADJUSTER LINK
4. DUST COVER CLIP
5. DUST COVER
6. HANDBRAKE LEVER
7. RETAINING PLATE
8. WEDGE
9. ADJUSTER LINK
10. ADJUSTER HOUSING
11. LEAF SPRING
12. PEG
13. PISTON
14. SEAL
15. CYLINDER BODY
16. BLEED SCREW
17. DUST COVER
18. SPRING PLATE
19. DISTANCE PIECE

Fig. 13. *Manually adjusted rear brake assembly*

Description

The difference between manually adjusted rear brakes and automatic adjusting rear brakes is in the wheel cylinder assemblies and the adjuster housing which replaces the fixed abutment in the automatic brake. Compare Fig. 13 with Fig. 2 of K2 which shows the automatic adjusting rear brake.

To remove and refit

The manually adjusted rear brake assembly is very similar to the automatic in this respect, see under K2 "Rear drum brakes—To remove and refit", but attention is drawn to the following differences:—

1. The steady post cap of the automatic assembly is replaced by a leaf spring, and removal is similar, depress the spring and turn the post.

2. When the lower brake shoe is removed it is possible that the lower adjuster link may drop out of the housing; this should be retained for reassembly.

3. If required, the adjuster housing may be removed from the backplate; it is retained by two washers and nuts.

After reassembly, brake adjustment is by the procedure outlined below.

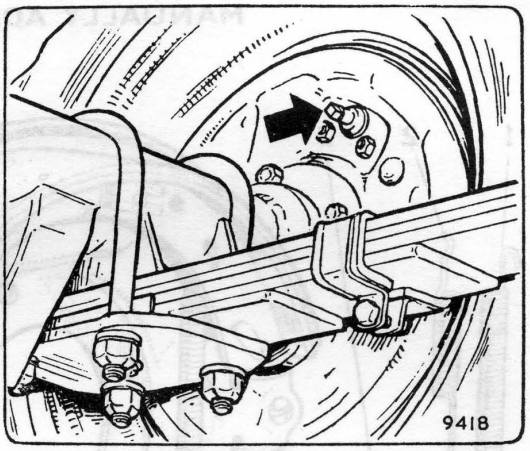

Fig. 14. *Manual brake adjuster*

Brake adjustment

Chock front wheels, release the handbrake and jack up rear wheels. Locate the adjuster at the front inboard face of the backplate (see Fig. 14) and turn adjuster clockwise to lock the shoes up to the drum, i.e. until resistance is felt. Slacken the adjuster until the wheel is free to rotate (usually two clicks) under light hand pressure

Spin the wheel and apply the brakes hard to centralise the shoes in the drum and recheck the adjustment, by the above procedure.

Repeat at the other rear wheel.

Normally, adjustment of the rear brakes will automatically adjust the handbrake, which when correct allows 4 to 6 notches of handbrake movement before the wheels are locked. If handbrake adjustment is not correct, see "Handbrake adjustment", but remember that with manually adjusted rear brakes the brake shoes should be locked up for the actual cable adjustment.

BRAKES

SECTION K2

CONTENTS

GIRLING BRAKES

GENERAL DESCRIPTION

These cars are equipped with Girling Brakes, disc brakes are fitted to the front wheels and drum brakes to the rear wheels. All four brakes are hydraulically operated, pressure being generated in the master cylinder by application of the brake foot pedal.

While the engine is running, this pressure is boosted by suspended vacuum servo unit to ensure light pedal pressure.

The handbrake operates the rear brakes only by an independent mechanical linkage.

MAINTENANCE

Maintenance checks will be required at regular intervals as given in the "Owner's Service Book" and will include the following:—

(i) Checking master cylinder fluid level.

(ii) Checking brake pads for wear and transposing to equalise wear.

(iii) Checking brake shoes for wear and cleaning out drums.

(iv) Checking flexible hoses for chafing, deterioration and leakage.

(v) Checking hydraulic pipes, connections, master cylinder calipers and wheel cylinders for leaks and damage.

(vi) Lubricating foot pedal pivot, handbrake lever and linkage.

(vii) Checking security of master cylinder, calipers, back plates, metal pipes and servo unit.

(viii) Checking caliper and wheel cylinder pistons for freedom of movement and corrosion.

(ix) Checking brake discs and drums for scoring.

(x) Renewing vacuum servo air cleaner, when applicable.

(xi) Renewing the brake fluid.

(xii) Renewing the flexible hoses and the seals in all hydraulic units.

Brake pad and shoe renewal

The brake pads should be renewed when the friction material has worn down to $\frac{1}{8}$ in. (3 mm.) thick and must be renewed when the minimum thickness of $\frac{1}{16}$ in. (1·6 mm.) is reached.

The brake shoes must be renewed when the linings have worn down to rivet level.

Front brake adjustment

The front brakes require no adjustment as the reducing thickness of the brake pads is automatically cancelled out by the fluid in the hydraulic system, thus the fluid level in the master cylinder reservoir will fall as the brake pads reduce in thickness.

Rear brake adjustment

Automatic

The rear brakes require no adjustment as the reducing thickness of the brake linings is automatically cancelled out each time the handbrake is applied.

Manual

The rear brakes require adjustment at intervals dependent upon conditions of usage. Refer to manually adjusted rear brakes—adjustment. See pages 29 and 30.

Brake fluid level

1. The brake fluid level in the master cylinder reservoir must be kept within $\frac{1}{2}$ in. (12 mm.) of the filler cap orifice.

2. Never fill the master cylinder reservoir completely since the expansion of the brake fluid, particularly in hot weather, may cause hydraulic pressure to build up and the brakes to bind.

3. Use only the recommended type of brake fluid, see under "Recommended Lubricants—Section P".

4. Exercise care not to spill any brake fluid on the car body as it is injurious to paintwork.

5. Before removing the filler cap from the master cylinder reservoir, clean the area around both components to prevent dirt entering the hydraulic system.

6. Ensure that the seal in the filler cap is in good condition and its air vent is unobstructed, as the obstruction may cause hydraulic pressure to build up and the brakes to bind.

7. The addition of brake fluid may be required to compensate the lowering of the fluid level due to the reducing thickness of the brake pads, but a sudden fall in fluid level will indicate a leak somewhere in the hydraulic system which must immediately be traced and rectified.

Renewing the fluid

1. Pump the old fluid from the hydraulic system by slackening off the bleed screw nearest to the master cylinder half to three-quarters of a turn and when the fluid ceases to flow retighten the bleed screw. Proceed with the next nearest and finish at the bleed screw furthest from the master cylinder in a similar manner. Discard all the old fluid.

2. Remove the master cylinder reservoir and wash out thoroughly with Girling Cleaning Fluid or Commercial Methyl Alcohol and dry off, see under "Master cylinder reservoir—To remove and refit".

3. Remove the calipers completely from the car, withdraw the two pistons from each and wash out thoroughly with Girling Cleaning Fluid or Commercial Methyl Alcohol and dry off, see under "Caliper—To remove and refit" and "To dismantle and reassemble".

4. Refill the master cylinder reservoir with the recommended brake fluid, see under "Recommended Lubricants—Section P" and bleed the hydraulic system of air, see under "Bleeding the hydraulic system".

Alternative method

Alternatively, the brake fluid can be renewed by continually topping up the master cylinder reservoir with fresh brake fluid above the recommended level and "bleeding" each bleed screw in turn until clean brake fluid is seen to flow from each bleed screw. It is **imperative** that air is not permitted to enter the hydraulic system by insufficient topping up, four depressions of the brake pedal will almost empty the master cylinder reservoir. It is **important** too that the brake pedal is depressed sharply but permitted to return unassisted after a short pause.

Flushing the hydraulic system

Renewing hoses and seals

When the hydraulic system has become contaminated with an incorrect fluid it must be flushed out immediately and refilled with fresh brake fluid of the recommended type. Should ever the contamination be caused by a mineral oil, in addition to the flushing, all hoses and seals must be renewed.

1. Pump the old fluid from the hydraulic system by slackening off the bleed screw nearest to the master cylinder half to three-quarters of a turn and when the fluid ceases to flow retighten the bleed screw. Proceed with the next nearest and finish at the bleed screw furthest from the master cylinder in a similar manner. Discard all the old fluid.

2. Remove the master cylinder reservoir and wash out thoroughly with Girling Cleaning Fluid or Commercial Methyl Alcohol and dry off, see under "Master cylinder reservoir—To remove and refit".

3. Remove the calipers completely from car, withdraw two pistons from each and wash out thoroughly with Girling Cleaning Fluid or Commercial Methyl Alcohol then dry off, see under "Caliper—To remove and refit" and "To dismantle and reassemble".

4. When there has been no contamination fill the master cylinder reservoir with Girling Cleaning Fluid or Commercial Methyl Alcohol and pump out through each bleed screw, while continuing to refill the master cylinder reservoir until at least a quart (1·1 litres) has passed through each bleed screw; discard all the old fluid.

5. When contamination has been experienced, remove the remaining hydraulic units, dismantle, clean, and refit new seals to all units, see under their respective headings. Wash out and dry off the metal pipes but **renew** all flexible hoses and the stop light switch.

6. Refill the master cylinder reservoir with the recommended brake fluid, see under "Recommended Lubricants—Section P" and bleed the hydraulic system of air, see under "Bleeding the hydraulic system".

Flexible hoses

The flexible hoses must be examined for chafing, general deterioration and leakage. When there is any doubt concerning the condition of the flexible hose it must be renewed. Should a flexible hose become blocked, it must never be cleared by probing but renewed.

SERVO AIR FILTER

The servo unit air filter element is of moulded cellular construction and must be renewed when soiled.

To remove and refit

1. Remove the cover by withdrawing the centre screw, discard the soiled filter element, clean the cover and rubber washer.
2. Position the rubber washer on the servo unit followed by the new element and secure the cover with the centre screw.

RENEWING SEALS AND REPLACEMENT SERVICE UNITS

When the hydraulic system has become contaminated with a mineral oil or the brake fluid, through old age, has become "gummy"; the seals in all the hydraulic units must be renewed.

The most satisfactory method of seal renewal or overhauling any unserviceable hydraulic unit is to renew it with a Replacement Service Unit available through the spares channels. Full details of this Service will be found in the "Parts List" under "Replacement Service Units".

In certain overseas territories this procedure may be impracticable or when the workshop available is up to the "Fuel Injection Equipment" standard of cleanliness, Service Kits containing the seals and, when necessary, tubes of lubricants, are available and can be used for the overhaul of all hydraulic units.

PREVENTIVE MAINTENANCE OF THE BRAKING SYSTEM

In order to maintain peak efficiency of the hydraulic system, the brake manufacturers recommend:—

(i) Brake fluid is renewed every 18 months or 24,000 miles (40,000 km.), whichever is the sooner.

(ii) Flexible hoses are renewed every 3 years or 40,000 miles (65,000 km.), whichever is the sooner.

(iii) Seals are renewed in all hydraulic units every 3 years or 40,000 miles (65,000 km.) or at the third change of brake pads, whichever is the sooner.

FRONT DISC BRAKES

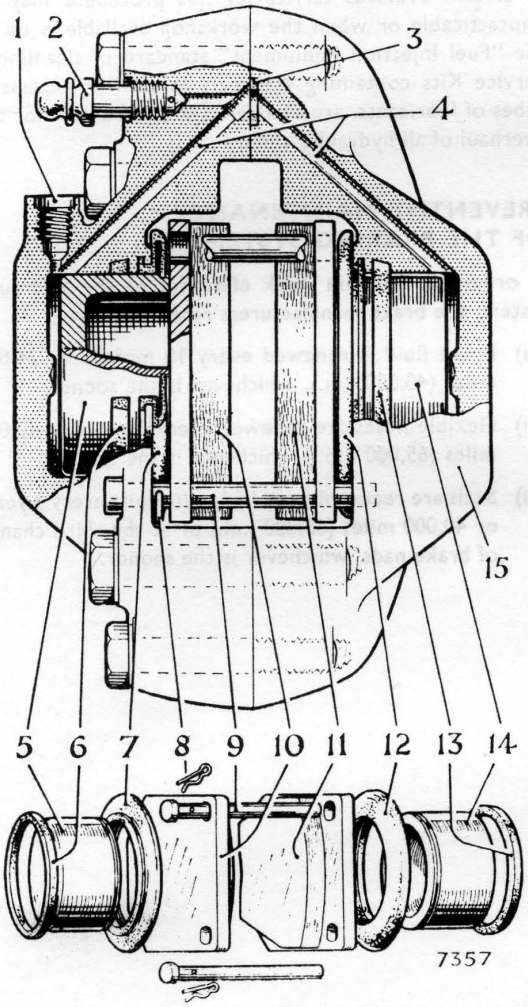

Fig. 1. *Exploded view of caliper assembly*

1.	FLEXIBLE HOSE CONNECTION
2.	BLEED SCREW
3.	FLUID CHANNEL SEAL
4.	INTERNAL FLUID CHANNEL
5. & 14.	PISTONS
6. & 13.	PISTON SEALING RINGS
7. & 12.	DUST COVERS
8.	RETAINING CLIPS
9.	RETAINING PINS
10. & 11.	BRAKE PADS
15.	CALIPER BODY

DESCRIPTION

Each front brake assembly consists of a disc which is attached to and rotates with the hub and a caliper mounted on the stub axle carrier which straddles the rotating disc.

The caliper houses two co-axially aligned pistons operating on a pair of brake pads, one each side of the disc. The brake pads are retained in the caliper by pins and spring clips. The pistons and bores are protected by dust covers fitted in the open end of the bores and fluid leakage is prevented by rubber sealing rings fitted in annular grooves machined inside the bores.

A metal splash guard, fitted on the stub axle carrier, protects the inner face of the disc from road dirt while its outer face is protected by the road wheel.

Application of the brake pedal generates pressure in the hydraulic system causing the pistons to apply equal pressure on each brake pad moving the latter into contact with the disc.

When the brake pedal is released, pressure on the brake pads collapses but the pistons and brake pads remain in position for the next brake application. In this manner brake pad wear is automatically taken up, thus no manual adjustment is necessary.

After negotiating a ford or water splash, or after driving on flooded roads it may be necessary to lightly apply the brakes a number of times in order to dry out the brake pads and discs to maintain full braking power. It is also advisable to do this after or during prolonged driving in wet weather, in circumstances when the brakes are not often in use, such as may occur on motorways, etc.

BRAKE PADS

The friction material of the brake pad is bonded and in some instances riveted to the backing plate and can therefore only be renewed by the fitment of complete brake pad assemblies.

To examine for wear

1. Apply the handbrake, jack up the front of the car and remove the front wheel.

2. Observe the thickness of the friction material of the brake pads and renew accordingly.

3. When it is observed that one brake pad has worn thinner than the other, normally the inner, and providing it is outside the specified minimum, the brake pads can be transposed across the disc, see under "Brake pads—To remove and refit".

To remove and refit (Fig. 1)

1. Apply the handbrake, jack up the front of the car and remove the front wheel.

2. Withdraw the two brake pads from the caliper by removing the two retaining clips and pins.

3. Refitting is the reverse of the removal sequence, but particular attention must be given to the following:—

   (i) Check the condition and fitting of the rubber dust covers and renew or refit as necessary, see under "Caliper—To dismantle and reassemble".

   (ii) Check the fluid level in the master cylinder reservoir to assess the possibility of overflowing when the pistons are pressed into their calipers. The overflowing can be staunched by wrapping the reservoir in an absorbent cloth or by syphoning off some of the fluid. Top up to correct level on completion of the brake pad change.

   (iii) Ensure that the brake pads, discs and calipers are free from dirt and grease.

   (iv) Pump the brake pedal until solid resistance is felt.

   (v) Do not make snap applications of the brakes or expect full braking power until the brake pads have bedded into the disc.

CALIPERS

To remove and refit

1. Apply the handbrake, jack up the front of the car and remove the front wheel.

2. Detach the caliper from the stub axle carrier by withdrawing two bolts and washers.

3. Suspend the caliper nearby without straining the flexible hose. When it is necessary to remove the caliper from the car, disconnect the pressure pipe from the flexible hose and remove the flexible hose from the support bracket, see under "Flexible hose—To remove and refit".

4. Refitting is the reverse of the removal sequence but particular attention must be given to the following:—

   (i) The longer bolt is fitted through the top lug of the caliper and through the rear lug of the steering arm.

   (ii) Bleed the hydraulic system of air when the caliper has been removed from the car, see under "Bleeding the hydraulic system".

   (iii) Pump the brake pedal until solid resistance is felt.

To dismantle and reassemble (Fig. 1)

1. Remove the two brake pads from the caliper by withdrawing two retaining clips and pins.

2. Clean off all road dirt from the caliper and pistons. **Do not split the caliper in two,** see under "Bridge bolts".

3. Withdraw the pistons, one at a time from the caliper, through the dust cover and remove the two dust covers from the open end of the piston bores.

4. Remove the two sealing rings from the piston bores using a plastic or wooden probe to avoid damaging the annular grooves.

5. Reassembly is the reverse of the dismantling sequence but particular attention must be given to the following:—

   (i) All parts must be meticulously cleaned and reassembled under equally clean conditions.

   (ii) Dry and coat the bores in the caliper, pistons and sealing rings with a liberal coating of brake fluid.

   (iii) Work the sealing rings into the large annular groove in the piston bores with the fingers.

   (iv) Insert the protruding lip of one dust cover into the groove in the open end of the piston bore; feed the piston, closed end first, through the dust cover into the bore to its fullest extent and fit the outer lip of the dust cover into the groove in the piston. Repeat with the second piston and dust cover.

Caliper bridge bolts

NO attempt must be made to remove the caliper bridge bolts joining the two halves of the caliper together. There is no point in doing so and in addition, the torque loadings to which the bridge bolts are tightened are critical.

When, in an emergency, the bridge bolts have been removed and, in the event of the fluid channel seal being undamaged, the caliper and bridge bolts must be scrupulously cleaned, dried and reassembled. Then, the bridge bolts tightened to the torque loadings given after the next paragraph. When reassembled, the caliper must be checked for fluid leaks under maximum pedal pressure while refitting it to the car by positioning a block of wood between the two pistons.

It must be understood that this will only provide a temporary remedy and the caliper must be returned to the manufacturers for overhaul at the first opportunity.

Bridge bolts—inner	60 lb. ft. (8·30 kg.m.)
Bridge bolts—outer	45 lb. ft. (6·22 kg.m.)

DISCS

Maximum run-out ·004 in. (·10 mm.)

The disc must be renewed when it has excessive run-out, suffered damage or become excessively scored.

Run-out

Excessive run-out of the disc causes the brake pads to knock the pistons back into the caliper and creates excessive pedal travel when the brakes are applied, thus it is important to keep the run-out to a minimum.

When the run-out exceeds the specified maximum, the disc can often be repositioned in relation to the hub to obtain a more satisfactory combination of manufacturing tolerances.

To check

1. Apply the handbrake, jack up the front of the car and remove the front wheel.
2. Prise off the hub cap, discard the split pin and tighten the castellated nut to a torque of 15—20 lb. ft. (2·07—2·76 kg.m.) whilst rotating the hub.
3. Mount a dial test indicator on the caliper or stub axle carrier so the stylus bears upon the disc approximately 1·00 in. (25 mm.) from the outer edge.
4. Rotate the disc and note the D.T.I. reading, when the "run-out" exceeds the specified maximum it may be sometimes reduced by repositioning the disc on the hub.
5. Set the hub endfloat, see under "Hub adjustment" in Section F.
6. Check the run-out as described in operations 3 and 4. Should the "run-out" exceed the specified maximum an investigation as to the condition of the hub bearings must be made.
7. Lock the castellated nut using a new split pin, fit the hub cap, front wheel and remove the jacks.

To remove and refit

1. Apply the handbrake, jack up the front of the car and remove the front wheel.
2. Remove the caliper from the stub axle carrier, see under "Caliper—To remove and refit", suspend nearby without straining the flexible hose.
3. Remove the disc and hub assembly from the stub axle, see under "Hubs—To remove and refit—Section F".
4. Remove the disc from the hub by withdrawing four bolts and washers.
5. Refitting is the reverse of the removal sequence but particular attention must be given to the following:—
   (i) Ensure the fitting faces of the hub and disc are free from dirt and burrs. In the instance of a replacement disc ensure that the protective coating is completely washed off.
   (ii) The four bolts are tightened to the torque given in the "General Data Section".
   (iii) The disc and hub assembly is refitted and the disc "run-out" checked, see under "Front hub—To remove and refit—Section F" and "Disc run-out—To check".
   (iv) Do not make snap brake applications or expect full braking power until the brake pads have bedded into the discs.

REAR DRUM BRAKES

DESCRIPTION

The rear brakes incorporate leading and trailing brake shoes operated by a single freely mounted wheel cylinder. Adjustment for lining wear is effected automatically each time the handbrake is applied by a pawl and ratchet mechanism incorporated in the wheel cylinder.

The two brake shoes are supported by platforms pressed in the back plate and spring loaded steady posts keep the brake linings parallel to the braking surface of the brake drum.

As hydraulic pressure is applied, the wheel cylinder piston moves the leading brake shoe outwards to the brake drum. As the leading brake shoe meets the brake drum, further movement of the wheel cylinder piston causes the wheel cylinder body to slide in the back plate and moves the trailing brake shoe outwards to the brake drum.

When the hydraulic pressure is released the pull-off springs return the brake shoes and wheel cylinder piston to their rest positions and the rotating brake drum centralises the brake shoes and wheel cylinder on the back plate.

BRAKE SHOES

The two brake shoes, known as leading and trailing, are fitted to each brake back plate and they are each steadied by a spring-loaded steady post.

The leading brake shoe is actuated by the piston of the wheel cylinder or handbrake lever while the trailing brake shoe is actuated by the reaction of the wheel cylinder body as its slides in the back plate slot.

Always fit factory-lined replacement brake shoes and new pull-off springs. These brake shoes have the correct type of lining which is ground accurately to size, thus ensuring an easy and quick bed-in to the brake drum.

To examine for wear

1. Chock the front wheels, release the handbrake, jack up the rear of the car and remove the rear wheel.
2. Remove the brake drum and distance piece from the hub by withdrawing a countersunk screw, clean all dust from the brake drum.
3. Observe the thickness of the brake lining above the rivets.
4. When they have worn down to rivet level, they must be renewed, see under "Brake shoes—To remove and refit".
5. Do not expect full braking power until the new brake linings have bedded into the brake drums.

To remove and refit (Fig. 2)

1. Chock the front wheels, release the handbrake, jack up the rear of the car and remove the rear wheel.
2. Remove the brake drum and distance piece, when fitted, from the hub by withdrawing a countersunk screw.
3. Withdraw the two brake shoe steady posts from the back plate by holding the head of the steady post and rotating the dished washer 90° and removing the spring and second dished washer.
4. Remove the toe end of the trailing brake shoe from the wheel cylinder tappet followed by the heel end from the fixed abutment, see Fig. 12.
5. The tension of the two pull-off springs is now released and the leading brake shoe can now be disengaged from the wheel cylinder lever.

   When the lining material has worn down to rivet level new brake shoes must be fitted.
6. Retain the piston and tappet within the wheel cylinder body by applying a rubber band.
7. Refitting is the reverse of the removal sequence, but particular attention must be given to the following:—
   - (i) Check the security of the back plate bolts.
   - (ii) Ensure that the wheel cylinder moves freely within the back plate slot; when this condition is evident, determine and eliminate the cause of the stiffness.
   - (iii) Smear the slots in the fixed abutment and tappet with Girling White Brake Grease; lubricate the threads of the tappet and adjuster wheel together with the body of the adjuster wheel, normally inside the wheel cylinder body, with molybdenum disulphide grease.
   - (iv) Free off the tappet in the adjuster wheel by turning it back 2½ turns after screwing it in to its fullest extent; this will ensure that the tappet is not threadbound, there must be as little friction as possible between these components.

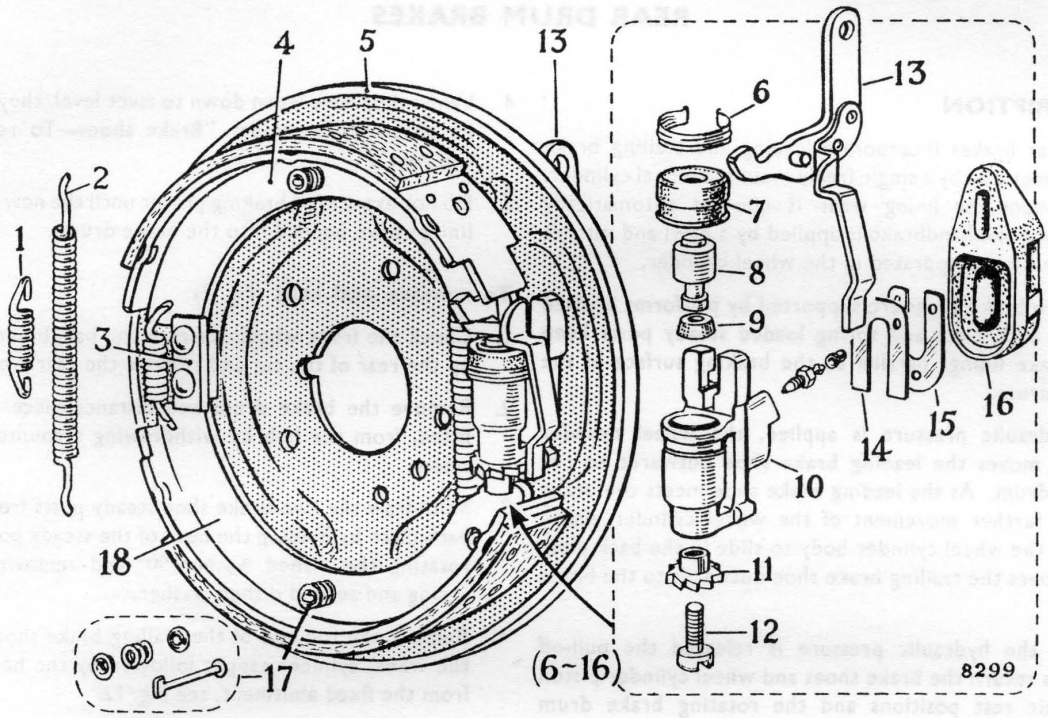

1. SHORT PULL-OFF SPRING
2. LONG PULL-OFF SPRING
3. FIXED ABUTMENT
4. LEADING BRAKE SHOE
5. BACK PLATE
6. CLIP
7. DUST COVER
8. PISTON
9. TAPERED SEAL
10. WHEEL CYLINDER BODY
11. ADJUSTER WHEEL
12. TAPPET
13. LEVER AND EXTENSION
14. SPRING PLATE
15. RETAINER PLATE
16. DUST COVER
17. STEADY POST
18. TRAILING BRAKE

Fig. 2. *Exploded view of left-hand rear brake back plate assembly*

(v) When fitting new brake shoes also fit new pull-off springs, the long spring is fitted between the back plate and the brake shoe webs.

(vi) Centralise the brake shoes on the back plate and rotate the adjuster wheel in the appropriate direction; the right-hand adjuster wheel has a right-hand thread while the left-hand adjuster wheel has a left-hand thread, to expand the brake shoes until there is just sufficient clearance to enable the brake drum to be fitted; this will minimise the initial adjustment.

(vii) Clean all dust from inside the brake drum and examine it for score marks, when the brake drum is badly scored it must be renewed.

(viii) Adjust the rear brakes by applying the hand-brake a number of times.

(ix) Do not expect full braking power until the brake shoes have bedded into the brake drums.

BRAKE ADJUSTING MECHANISM (Fig. 3)

The brake adjusting mechanism is incorporated in the wheel cylinder and actuated by an extension attached to the wheel cylinder lever; it consists of the following:—

(i) A tappet and adjuster wheel, freely mounted in the wheel cylinder body at the opposite end to the piston, ratchet type teeth are machined on the outer edge of the adjuster wheel.

(ii) A metal extension is attached to the wheel cylinder lever, the tip of which forms a pawl and rests on the peak of one adjuster wheel tooth.

(iii) A torsion type return spring mounted on a bracket welded to the outer face of the back plate, returns the wheel cylinder lever to the rest position.

When there is no lining wear and the handbrake is applied, the wheel cylinder piston will move the leading brake shoe into contact with the brake drum and the wheel cylinder body sliding in its slot will move the trailing brake shoe into contact with the brake drum.

Simultaneously with this movement, the tip of the wheel cylinder lever extension moves along the inclined face of the adjuster wheel ratchet teeth but without rotating it.

As lining wear takes place, the movement of the wheel cylinder lever and extension increases and its tip will rotate the adjuster wheel and extend the tappet to cancel out the lining wear.

On releasing the handbrake, the wheel cylinder lever will be returned to its rest position by the torsion spring and the extension will adopt its normal position on the peak of one ratchet tooth.

Initial adjustment

Periodical adjustment is unnecessary but adjustment will be required after any brake shoes have been refitted.

1. Apply the handbrake unhurriedly a number of times, to prevent unnecessary wear on the pawl and ratchet mechanism in the handbrake lever, the button on top of the lever can be depressed during the whole operation.

2. Stop when the handbrake lever reaches a constant height.

WHEEL CYLINDERS

The wheel cylinder consists of an alloy body, housing a piston and tapered seal which are protected by a rubber dust cover retained by a metal clip.

The wheel cyinder body adjacent to the head of the piston is built up to form a pivot for the lever of the handbrake. The longer and outer end of this lever is attached to the handbrake cable or brake rod while the short end locates an aperature in the toe end of the leading brake shoe web.

A tappet and adjuster wheel is fitted to the opposite end of the wheel cylinder body and with an extension on the wheel cylinder lever forms the self-adjusting mechanism.

The wheel cylinder is a sliding fit in the back plate thus facilitating centreing of the brake shoes. The wheel cylinder is located in its slot by spring and retaining plates fitted on to the neck of the wheel cylinder body as it protrudes through the back plate. The protruding portion of the wheel cylinder body contains two tappings, which accommodate the two pressure pipes or pressure pipe and bleed screw for right- and left-hand wheel cylinders respectively.

To remove and refit (Fig. 2)

1. Remove the brake shoes from the back plate, see under "Brake shoes—To remove and refit".

2. Detach the handbrake cable or rod from the wheel cylinder lever by withdrawing the spring clip from the clevis pin, removing the washers and clevis pin from the cable forkend or by discarding the split pin and releasing the spire clip on the outer end of the brake rod.

3. Withdraw the hydraulic pressure pipe(s) from the wheel cylinder by releasing the union nut(s) and remove the bleed screw as necessary, trapping any escaping fluid in a drip tray.

4. Remove the torsion spring from the wheel cylinder lever and backing plate bracket with a pair of pliers.

5. Remove the rubber dust cover, retainer and spring plates from the wheel cylinder lever and body; holding the wheel cylinder lever withdraw the wheel cylinder from the backplate slot, remove the wheel cylinder lever by moving it down into the back plate slot.

6. Identify the wheel cylinder left- or right-hand.

7. Refitting is the reverse of the removal sequence, but particular attention must be given to the following:—

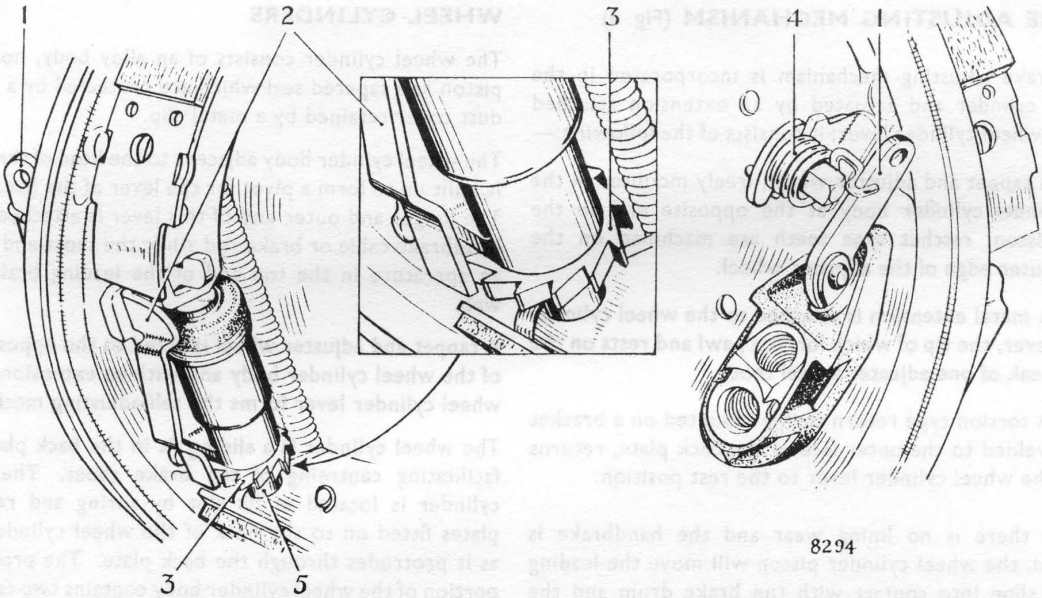

1. WHEEL CYLINDER LEVER
2. EXTENSION
3. ADJUSTER WHEEL
4. TORSION TYPE SPRING
5. TAPPET

Fig. 3. *Internal and external views of brake back plate showing self-adjusting wheel cylinder with an enlarged view of the wheel cylinder extension and adjuster wheel*

(i) Ensure that the wheel cylinder body has complete freedom of movement within the back plate slot, **this is important.**

(ii) Feed the wheel cylinder lever upward and into the back plate slot, feed the neck of the wheel cylinder body into the back plate slot and locate wheel cylinder lever pivot across the forked extension of the wheel cylinder body; fit the spring plate to the neck of the wheel cylinder body from the lever end, fit the retainer plate from the bottom end of the wheel cylinder neck and engage the pips of the spring plate.

(iii) Position the spring clip on the handbrake cable clevis pin towards the rear of the car or the spring clip above the brake rod and fit a new split pin.

(iv) Bleed the hydraulic system of air, see under "Bleeding the hydraulic system."

(v) Adjust the rear brakes, see under "Initial adjustment".

(vi) Check the handbrake adjustment, see under "Handbrake adjustment".

To dismantle and reassemble (Fig. 2)

1. Clean off all road dirt and when working on two or more wheel cylinders identify them, left or right-hand.
2. Withdraw the tappet and adjuster wheel from the wheel cylinder body by discarding the rubber band.
3. Remove the dust cover at the piston end by releasing the metal clip.
4. Eject the piston from the wheel cylinder body by applying low pressure air to the pressure pipe or bleed screw tappings.
5. Remove the tapered seal from the piston.
6. Reassembly is the reverse of the dismantling sequence, but particular attention must be given to the following:—
   (i) All parts must be meticulously clean and re-assembled in equally clean conditions.
   (ii) The tapered seal is fitted to the piston with a liberal coating of brake fluid and with the wider end of the taper away from the head of the piston.
   (iii) Smear the piston with Girling Red Rubber Grease and feed the piston and seal into the wheel cylinder body, exercising care not to damage the fine edge of the seal.
   (iv) Smear the inside edge of the dust cover with Girling Red Rubber Grease.
   (v) The adjuster wheel having the identification ring has a left-hand thread and with its tappet is fitted to the left-hand wheel cylinder; the plain adjuster wheel has a right-hand thread and with its tappet is fitted to the right-hand wheel cylinder.

BRAKE BACK PLATE

The brake back plate is a steel pressing suitable shaped to support the brake adjuster, steady posts, wheel cylinder and brake shoes. The back plate is mounted on the outer ends of the rear axle casing but cannot be removed without disconnecting the hydraulic system and removing the rear hub.

The left-hand back plate can be identified by the small cut-out in the axle casing aperture.

To remove and refit

1. Remove nave plate and slacken off the axle shaft nut.
2. Chock the front wheels, release the handbrake, jack up the rear of the car and remove the rear wheel.
3. Remove the brake drum and, when fitted, the distance piece from the hub by withdrawing the countersunk screw.
4. Detach the handbrake cable or rod from the wheel cylinder lever by withdrawing the spring clip from the clevis pin, removing the plain and spring washers and clevis pin from the cable forkend or by discarding the split pin and releasing the spring clip.
5. Disconnect the pressure pipe(s) from the wheel cylinder by releasing the union nut(s) and trapping any escaping fluid in a drip tray.
6. Remove the hub and key from the tapered end of the axle shaft by removing a nut and washer and fitting a suitable hub remover on the wheel studs, see under "Axle shaft—To remove and refit, Rear Axle, Section G".
7. Remove the back plate, oil catcher and sealing joints from the axle flange by withdrawing five nuts, washers and bolts; note the position and thickness of the sealing joints, see under "Axle shaft—To remove and refit, Rear Axle, Section G".
8. Refitting is the reverse of the removal sequence, but particular attention must be given to the following:—
   (i) Refit the sealing joints, one each side of the back plate as necessary, see under "Axle shaft—To remove and refit, Rear Axle, Section G".
   (ii) Position the head of the clevis pin above the handbrake cable forkend or the spring clip above the brake rod and fit a new split pin.
   (iii) Bleed the hydraulic system of air, see under "Bleeding the hydraulic system".
   (iv) Adjust the rear brakes, see under "Initial adjustment".
   (v) Check handbrake adjustment, see under "Hand-brake adjustment".

HYDRAULIC SYSTEM

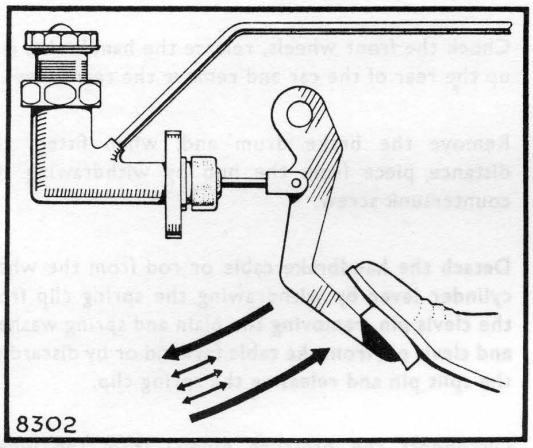

Fig. 4. *Indicating the long and short pedal strokes necessary to bleed the hydraulic system of air*

GENERAL

Great cleanliness is essential when dealing with any part of the hydraulic system and especially when the brake fluid is concerned. Dirty or aerated brake fluid must never be used in the hydraulic system, never use fluid which has been bled from the hydraulic system.

Use only the recommended type of brake fluid for topping up the master cylinder reservoir.

BLEEDING THE HYDRAULIC SYSTEM

Bleeding or expelling air from the hydraulic system is not a maintenance operation and will only be necessary when a portion of the hydraulic system has been disconnected or when the fluid level in the master cylinder reservoir has fallen so low that air has entered the system.

Always keep a careful check on the fluid level in the master cylinder reservoir during bleeding since it is most important that a high level of fluid is maintained. Should air enter the master cylinder from the reservoir, the complete operation must be repeated.

1. Destroy all vacuum in the servo unit by repeated operation of the brake pedal, otherwise difficulty will be experienced in completely expelling the air from the hydraulic system. **Do not** start the engine before bleeding the system has been completed.

2. Ensure that all hydraulic connections are secure and the master cylinder reservoir is filled with fluid which must be kept at a high level during the complete operation.

3. Remove the rubber cap from the bleed screw of the left-hand front caliper, fit the bleed tube and immerse the free end of the bleed tube in a glass vessel containing a small quantity of fluid.

4. Slacken off the bleed screw half to three-quarters of a turn and with an assistant depress the brake pedal a succession of long and short rapid strokes, i.e. the pedal depressed through its full stroke followed by two or three short rapid strokes and then allowed to fly back to the stop with the foot removed; any floor covering that prevents the full pedal stroke must be removed. Actuate the brake pedal in this manner until the fluid entering the glass vessel is free from air bubbles and then re-tighten the bleed screw on the next downward stroke of the brake pedal to the tightening torque given in the "General Data Section" (Fig. 4).

5. Remove the bleed tube and glass vessel from the bleed screw and refit the rubber cap.

6. Repeat the previous three operations with the right hand front caliper and finish with the wheel cylinder of the left-hand rear brake; the right-hand wheel cylinder has no bleed screw.

7. Top up the master cylinder reservoir to the correct level and refit the filler cap ensuring its seal is in good condition and its air vent is unobstructed, as an obstruction in the latter may cause pressure to build up and the brakes to bind.

Bleed screws

The calipers and wheel cylinder have conical ended bleed screws which bed on to a seat formed in the bottom of the bleed screw tapping in the body of that particular component.

The bleed screws must never be over-tightened since their threads may become stripped. Use only short spanners to tighten the bleed screws, the tightening torque is given in the "General Data Section".

Checking for leaks

1. Clean the connections, metal pipes and flexible hoses of all road dirt.

2. Start and run the engine when a vacuum servo unit is fitted.

3. Apply firm pressure to the brake pedal for a number of seconds while an assistant examines the connections, metal pipes and flexible hoses for leakage.

4. When leakage is observed at the connections, it may be necessary to dismantle the faulty connection to determine the cause, for tightening the bleed screw or union nut may only lead to stripped threads. Leaking metal pipes or flexible hoses must be renewed.

   After making any disconnections it will be necessary to bleed the hydraulic system of air, see under "Bleeding the hydraulic system".

BRAKE PIPE RUN

The pressure port of the master cylinder is connected by a metal pipe, which runs across the rear bulkhead, to the inlet port of the servo unit mounted in a rear corner of the engine compartment and the outlet port of the servo unit is connected by a second metal pipe to the top forward connection of the five-way connector mounted on the right-hand front wheel arch.

The centre connection of the five-way connector accommodates the stop light switch while the bottom forward and bottom rearward connections are connected by metal pipes and flexible hoses to the left- and right-hand front brake calipers respectively. The junctions of the metal pipes and flexible hoses, in addition to the metal pipe to the left-hand front brake caliper are supported in brackets and clips welded to the rear face of the front suspension crossmember.

The top rearward connection of the five-way connector is connected by a metal pipe, which passes through the wheel arch and runs rearward under the floor of the car to a flexible hose mounted in a bracket welded to the car floor.

The second end of the rear flexible hose is fitted in a support bracket welded on the rear axle casing which is connected by a short pipe to the lower tapping of the right-hand wheel cylinder. The upper tapping of this wheel cylinder is connected by a pipe which runs the width of the rear axle to the lower tapping of the left-hand wheel cylinder, the upper tapping accommodates the bleed screw.

The pressure pipes in the engine compartment, on the front suspension cross beam, under the floor and on the rear axle are attached by rubber sleeves and clips to absorb vibration which could result in possible fracture.

To provide the vacuum for servo assistance, the servo unit is connected to the engine inlet manifold by a flexible hose and a non-return valve.

Bending pressure pipes

The diameter of the pressure pipes is as follows:—

Pressure: From master cylinder to brake servo unit and from brake servo unit to calipers and wheel cylinders: $\frac{3}{16}$ in. diameter with $\frac{7}{16}$ in. 20 T.P.I. U.N.F. union nuts.

Should the pressure pipes be supplied in straight lengths, they must be shaped to follow the form of the original. In the event of the original being damaged beyond usefulness, a pattern must be made up from a length of heavy gauge malleable wire.

The new pipe length can easily be shaped with the fingers or on a pipe shaping "dolly" but in the absence of the latter, a piece of pipe similar in radius to the shape required can be used. To assist in forming the shape adjacent to the ends of the new length, a five-way connector can be screwed onto the union nut to provide a better grip.

Union nuts

The union nuts must never be overtightened since their threads may become stripped. Use only short spanners to tighten the union nuts, the tightening torque is given in the "General Data Section".

FLEXIBLE HOSES

To accommodate the constantly changing position of the front wheels and the rear axle whilst the car is moving, flexible hoses are used to connect the pressure pipes to the front calipers and the metal pipes mounted on the rear axle casing.

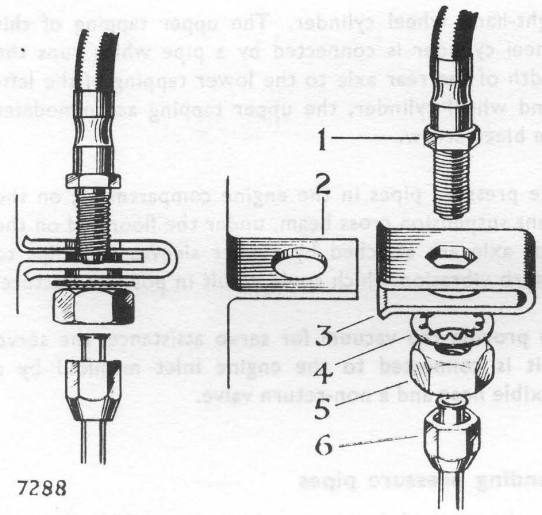

1. HOSE HEXAGON
2. SUPPORT BRACKET
3. LOCATING PLATE
4. WASHER
5. NUT
6. PRESSURE PIPE UNION NUT

Fig. 5. *Flexible hose connection. In some instances the locating plate (3) is omitted*

To remove and refit (Fig. 5)

1. Grip the hexagon of the flexible hose adjacent to the support bracket with a spanner, when a locating plate is fitted to the support bracket this spanner is unnecessary; detach the pressure pipe from the flexible hose by releasing the union nut and trapping any escaping fluid in a drip tray.

2. Still holding the hexagon of the flexible hose, withdraw the flexible hose from the support bracket by releasing the locknut and washer; when a locating plate is fitted, it is unnecessary to hold the flexible hose.

3. Remove the flexible hose and sealing washer from the brake caliper by applying a spanner to the hexagon at that end and permitting its entire length to rotate.

4. Refitting is the reverse of the removal sequence but particular attention must be given to the following:—

   (i) It is essential that the flexible hose is fitted to the brake caliper first and using a new sealing washer.

   (ii) Feed the end of the flexible hose into the support bracket, apply a spanner to the hexagon and set the run of the hose to clear all obstructions that could cause chafing. Secure the flexible hose to the support bracket with the washer and locknut and fit the pressure pipe to the protruding threaded end of the flexible hose with the union nut while holding the hexagon with the spanner to prevent the flexible hose from moving.

   When fitted, slide the locating plate onto the support bracket so the plain hole is on the pressure pipe side. Feed the end of the flexible hose into the locating plate and support bracket, locating the hexagon within the plate so the run of the flexible hose is clear of all obstructions that could cause chafing. Secure the flexible hose and fit the pressure pipe as described in the previous paragraph.

   (iii) Check that no chafing can occur under conditions of full bump and rebound by bouncing the body of the car up and down. In the instance of the front flexible hoses, position the front wheels on both full locks in addition to the straight ahead position.

   (iv) Bleed the hydraulic system of air, see under "Bleeding the hydraulic system".

MASTER CYLINDER RESERVOIR

Description

The master cylinder reservoir is fabricated from a translucent material and provides instant recognition of the fluid level without removing the filler cap.

The reservoir is screwed directly into the feed port in the end of the master cylinder. It is important to ensure that the filler cap seal is in good condition to prevent fluid leakage and the air vent holes are unobstructed for when these holes become obstructed pressure can build up in the hydraulic system and cause the brakes to bind.

To remove and refit

1. Unscrew the reservoir from the feed port in the front end of the master cylinder trapping the escaping fluid in a drip tray.

2. Refitting is the reverse of the removal sequence, but particular attention must be given to the following:—

   (i) The hydraulic system is bled of air, see under "Bleeding the hydraulic system".

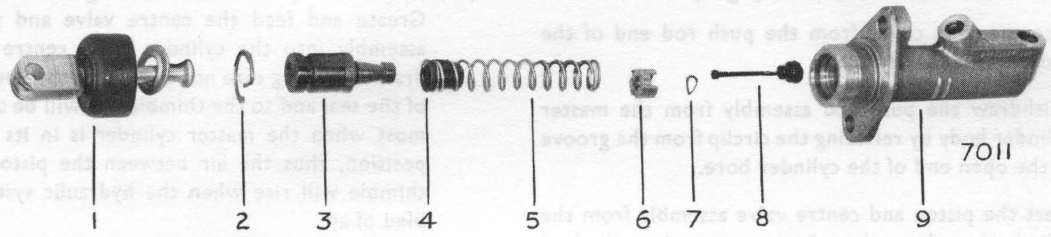

1. PUSH ROD
2. CIRCLIP
3. PISTON AND TAPERED SEAL
4. THIMBLE
5. PISTON RETURN SPRING
6. VALVE SPACER
7. SPRING WASHER
8. CENTRE VALVE AND SEAL
9. MASTER CYLINDER BODY

Fig. 6. *Exploded view of brake master cylinder*

MASTER CYLINDER

Description

The master cylinder is mounted inside the engine compartment on the rear bulkhead.

When pressure is applied to the brake pedal, the piston moves down the cylinder bore compressing the piston return spring against the centre valve and closes the seal over the feed port cutting off the supply of fluid from the master cylinder reservoir. Continued movement of the piston forces the fluid out of the pressure port through the servo unit to the front calipers and rear wheel cylinders and also keeps the centre valve hard on the feed port.

On the return stroke, the piston moves back along the cylinder bore and with the final movement of the piston lifts the centre valve off the feed port thus permitting the free flow of fluid between the master cylinder and its fluid reservoir.

To remove and refit

1. Destroy the vacuum in the servo unit by repeated operation of the brakes, otherwise difficulty will be experienced in completely expelling the air from the hydraulic system. DO NOT start the engine before bleeding the system has been completed.
2. Disconnect the pressure pipe from the master cylinder by releasing the union nut and trapping any escaping fluid in a drip tray.
3. Remove the pedal return spring cap from the master cylinder push rod by moving it forward away from the pedal lever and sliding the cap off the push rod.
4. Identify the position of the clevis pin in the pedal lever and detach the master cylinder push rod from the pedal lever by removing the spring clip, washer and withdrawing the clevis pin.
5. Remove the master cylinder and distance piece from the rear bulkhead inside the engine compartment by removing two nuts, washers and bolts which pass through the mounting flange and collect the pedal return spring from inside the car.
6. Refitting is the reverse of the removal sequence, but particular attention must be given to the following:—
   (i) The pedal lever has two push rod clevis pin holes and the push rod must be returned to its original position.
   (ii) The pedal lever is held rearwards, the pedal return spring is compressed while the spring cap is fed over the master cylinder push rod so its recessed face accommodates the forkend of the push rod.
   (iii) Bleed the hydraulic system of air, see under "Bleeding the hydraulic system".

To dismantle and reassemble (Fig. 6)

1. Ease the dust cover from the push rod end of the master cylinder body.

2. Withdraw the push rod assembly from the master cylinder body by releasing the circlip from the groove in the open end of the cylinder bore.

3. Eject the piston and centre valve assembly from the cylinder bore by applying low pressure air to the feed port in the end of the body.

4. Detach the centre valve assembly from the shouldered end of the piston by easing the leaf of the thimble upward clear of the piston shoulder.

5. Remove the thimble and piston return spring from the stem of the centre valve by compressing the return spring and passing the small end of the valve stem through the keyhole-shaped aperture in the thimble.

6. Withdraw the valve spacer and spring washer from the valve stem and ease the seal from the opposite side of the stem.

7. Ease the tapered seal from the shouldered end of the piston.

8. Reassembly is the reverse of the dismantling sequence but particular attention must be given to the following:—

   (i) All parts must be meticulously cleaned and reassembled under equally clean conditions.

   (ii) The seal is fitted to the centre valve, flat face first, with a liberal coating of brake fluid.

   (iii) The spring washer is fitted to the valve stem, domed face first, followed by the valve spacer so the "legs" encase the spring washer and seal.

   (iv) The piston return spring is fed onto the outside of the thimble and fitted to the valve stem, return spring first; the spring is compressed so the end of the valve stem can be locked in the keyhole-shaped aperture in the thimble, ensure that the piston return spring is located centrally on the valve spacer.

   (v) The tapered seal is fitted to the piston, flat face first and from the shouldered end of the piston with a liberal coating of brake fluid.

   (vi) The piston is fitted to the thimble, press the leaf downward so that the valve and piston assembly lock positively together.

   (vii) Smear the piston with Girling Red Rubber Grease and feed the centre valve and piston assembly into the cylinder bore, centre valve first, exercising care not to damage the fine edge of the seal and so the thimble leaf will be uppermost when the master cylinder is in its fitted position, thus the air between the piston and thimble will rise when the hydraulic system is bled of air.

   (viii) Smear the inside of the dust cover with Girling Red Rubber Grease and ensure that the circlip, which secures the push rod assembly, is fully engaged in its groove in the open end of the cylinder bore.

GIRLING SERVICE KITS

Girling Service Kits, containing the necessary seal(s) and a tube of Girling Red Rubber Grease, are available for all hydraulic units. The appropriate Service Kit must always be obtained when any seal(s) need renewing. Full instructions are included with the seal(s) but the following instructions should also be observed:—

1. When the hydraulic unit has been cleaned of road dirt and dismantled, the cylinder bore and internal parts must be cleaned with Girling Cleaning Fluid and allowed to dry off.

2. Examine the cylinder bore and piston(s); when the working surfaces are smooth to the touch, without corrosion, score marks or ridges, the new seal(s) can be fitted and the unit re-assembled. When there is any doubt as to the condition of the working surfaces, a new replacement hydraulic unit must be obtained.

3. All parts must be meticulously cleaned and reassembled in equally clean conditions.

4. Fit the new seal(s) to the cylinder bore, piston or valve with a liberal coating of brake fluid giving particular attention to the position of the seal lip which is towards the pressure or feed supply of the fluid.

5. Smear the piston(s) with Girling Red Rubber Grease and insert into the cylinder bore, exercising care not to damage or fold back the fine edge of the seal(s).

6. Smear the inside of the dust cover(s) with Girling Red Rubber Grease, fit to the cylinder body and secure with the metal clip as necessary.

HANDBRAKE

DESCRIPTION

The handbrake operates on the rear wheels only and consists of a hand lever, situated between the driver's seat and the door, with a cable and rod linkage connecting the hand lever to the two levers, one included in each wheel cylinder. The handbrake is automatically adjusted as the rear brakes are adjusted.

The handbrake cable is nylon lined and requires no lubrication.

The rear end of the handbrake inner cable terminates at the lever of one wheel cylinder while the rear end of the outer casing terminates in a clip welded on a brake rod connected to the opposite wheel cylinder lever with the inner end of the rod steadied by a bracket welded to the differential cover of the rear axle.

The wheel cylinder lever attached to the inner cable moves as the handbrake is applied and the opposite wheel cylinder lever, attached to the brake rod, moves due to the reaction of the handbrake cable outer casing. The inner ends of the wheel cylinder levers locate in apertures formed in the webs of the leading brake shoes, thus movement of these levers causes the leading brake shoes to move outwards to the brake drums. Further movement of the wheel cylinder levers causes the wheel cylinder bodies to slide in the back plate slots and move the trailing brake shoes outwards to the brake drums.

HANDBRAKE LEVER

To remove and refit (Fig. 7)

1. Chock the front wheels and release the handbrake.

2. Tilt the driver's seat forward and remove the handbrake lever shield from the door sill by withdrawing three screws.

3. Remove the handbrake lever from the door sill by withdrawing two bolts, washers and distance pieces; detach the cable from the bottom of the lever by withdrawing the spring clip from the clevis pin, removing the washer and clevis pin from the forkend.

4. Refitting is the reverse of the removal sequence but particular attention must be given to the following:—

   The distance pieces are fitted between the handbrake lever and door sill.

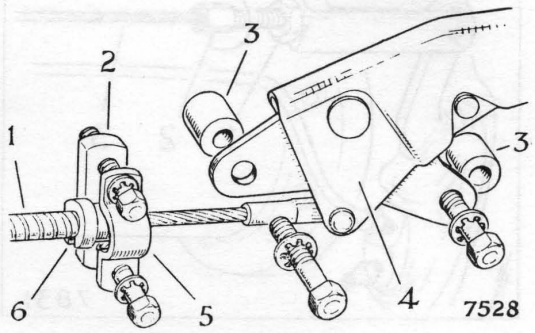

1. HANDBRAKE CABLE
2. DISTANCE PIECE
3. DISTANCE PIECE
4. HANDBRAKE LEVER
5. ABUTMENT CLIP
6. ABUTMENT BUSH

Fig. 7. *The handbrake lever; left-hand drive shown, right-hand drive symmetrically opposite*

HANDBRAKE CABLE

To remove and refit (Figs. 8 and 9)

1. Remove the handbrake lever from the door sill and cable, see under "Handbrake lever—To remove and refit".

2. Detach the handbrake cable from the door sill by withdrawing two bolts and washers from the abutment clip and distance piece, remove the abutment bush from the outer casing.

3. Withdraw the handbrake cable and floor grommet from beneath the car after removing the clip from the car frame by withdrawing a self-tapping screw.

4. Detach the handbrake cable from the wheel cylinder lever by withdrawing the spring clip from the clevis pin, removing the plain and spring washers and clevis pin from the forkend.

5. Remove the handbrake cable from the brake rod abutment by easing the rubber grommet from the end of the outer casing, then sliding the handbrake cable sideways and lifting the inner cable from the brake rod abutment.

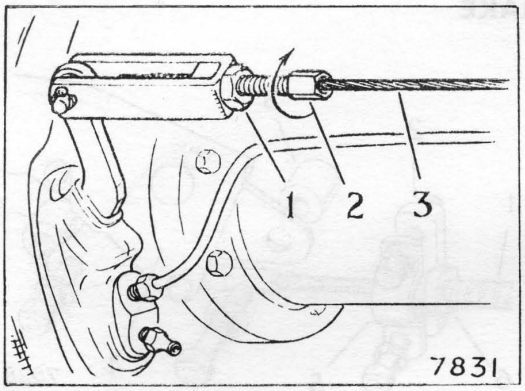

1. LOCKNUT
2. THREADED SLEEVE
3. INNER CABLE

Fig. 8

The handbrake cable adjuster; the arrow indicates the direction of rotation to shorten the cable. Right-hand drive shown, left-hand drive symmetrically opposite

6. Refitting is the reverse of the removal sequence but particular attention must be given to the following:—

   (i) The handbrake cable is fitted at the hand lever end first with the flange of the abutment bush away from the lever.

   (ii) Ensure that the rubber grommets are fitted to the floor and onto the rear end of the outer casing and the rubber sleeve under the frame clip.

   (iii) Position the spring clip of the handbrake cable clevis pin towards the rear of the car.

   (iv) When a replacement handbrake cable has been fitted, the handbrake operation is checked, see under "Handbrake—Adjustment".

HANDBRAKE ROD

To remove and refit

1. Chock the front wheels, release the handbrake and jack up the rear of the car.

2. Withdraw the brake rod from the wheel cylinder lever by discarding the split pin and releasing the spring clip.

3. Detach the rubber grommet from the end of the handbrake outer casing and move it along the inner cable.

4. Hold the brake cable outer casing with one hand, slide the brake rod abutment off the end of the outer casing and detach the brake rod from the inner cable through the slot in the abutment.

5. Withdraw the brake rod from the bearing inside the rear axle clip.

6. Remove the bearing from the rear axle clip when the hole has become elongated.

7. Refitting is the reverse of the removal sequence but particular attention must be given to the following:—

   (i) The spring clip is fed onto the brake rod so the double "prongs" point outward and when clipped over the wheel cylinder lever, the lever is between the short single "prong" and the double "prongs". Fit a new split pin.

   (ii) The rubber grommet is fitted over the end of the outer casing.

   (iii) When a replacement rod has been fitted, the handbrake operation is checked, see under "Handbrake adjustment".

Handbrake adjustment (Fig. 8)

Adjustment of the rear brakes will automatically adjust the handbrake and when the handbrake operation is correct there is four to six clicks of handbrake lever travel before the rear wheels are fully locked.

When, with the rear brakes correctly adjusted, excessive handbrake lever travel is experienced adjust the length of the handbrake cable as follows:—

1. Chock the front wheels, release the handbrake and jack up the rear of the car.

2. Remove the slackness from the handbrake cable by slackening off the locknut and rotating the threaded sleeve on the end of the handbrake cable clockwise, retighten the locknut.

3. Ensure that the brakes do not bind by rotating each rear wheel by hand.

4. Apply the handbrake, remove the jack and the chocks

BRAKE PEDAL ASSEMBLY

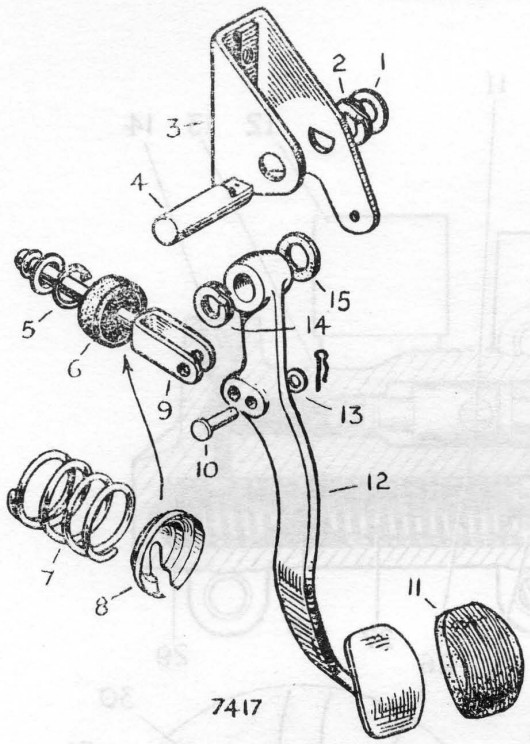

1. PLAIN WASHER
2. SPRING WASHER
3. PEDAL BRACKET
4. PEDAL SHAFT
5. CIRCLIP
6. RUBBER COVER
7. RETURN SPRING
8. CAP
9. PUSH ROD ASSEMBLY
10. CLEVIS PIN
11. PEDAL PAD
12. FOOT PEDAL
13. PLAIN WASHER
14. SPRING WASHER
15. FELT WASHER

Fig. 9. *The pedal assembly*

DESCRIPTION

The pedal assembly is of the pendulum type mounted in an individual bracket attached to the bulkhead inside the car. The master cylinder push rod can be attached to one or the other of the two holes in the pedal lever and this will affect the position of the pedal pad by approximately 1½ in. (4 cm.). The pedal return spring is mounted on the master cylinder push rod between the pedal lever and the bulkhead while the pedal stop is incorporated in the master cylinder.

To remove and refit

1. Identify the position of the clevis pin in the pedal lever and detach the master cylinder push rod from the pedal lever by withdrawing the spring clip from the clevis pin, removing the washer and clevis pin from the forkend.
2. Remove the pedal assembly from inside the car by removing the bolt and washer from the top of the bulkhead inside the engine compartment above the top master cylinder attachment and the top master cylinder nut, washer and bolt.
3. Refitting is the reverse of the removal sequence but particular attention must be given to the following:—
   (i) The pedal lever has two push rod clevis pin holes and the push rod must be returned to its original position.

To dismantle and reassemble (Fig. 9)

1. Withdraw the felt and spring washers from inside the pedal bracket by discarding the split pin and ejecting the pedal shaft and collecting the plain and spring washers from the "D"-shaped end of the shaft.
2. Remove the rubber pad from the pedal when it is seen to be well worn.
3. Reassembly is the reverse of the dismantling sequence but particular attention must be given to the following:—
   (i) The rubber pad is affixed to the pedal lever with a suitable adhesive.
   (ii) The spring and felt washers are positioned one each side of the pedal lever within the bracket.
   (iii) The pedal shaft is fed into the bracket and pedal lever "D"-shaped end first, so the flat on the shaft aligns with the flat in the opposite end of the bracket, to its fullest extent, the spring and plain washers fitted to the "D"-shaped end, use a new split pin.

GIRLING VACUUM SERVO UNIT

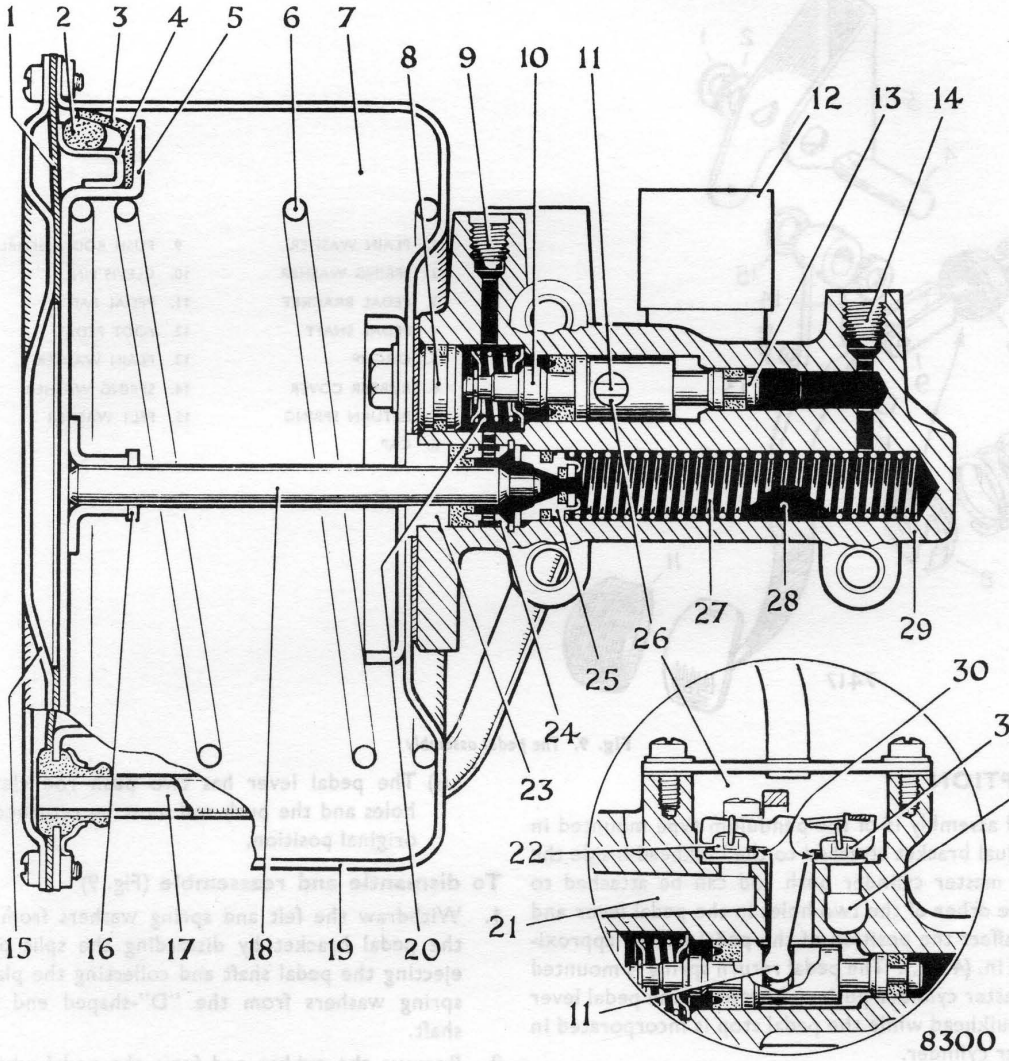

1. END COVER GASKET
2. PISTON BACKING RING
3. PISTON SEAL
4. PISTON SEAL RETAINER
5. PISTON
6. PISTON RETURN SPRING
7. CONSTANT VACUUM
8. END PLUG
9. HYDRAULIC INLET PORT
10. VALVE CONTROL PISTON, LOW PRESSURE END
11. "T" SHAPED LEVER
12. AIR FILTER ASSEMBLY
13. VALVE CONTROL PISTON, HIGH PRESSURE END
14. HYDRAULIC OUTLET PORT
15. END COVER
16. PISTON BUFFER
17. TRANSFER TUBE
18. PISTON ROD
19. VACUUM CYLINDER
20. CONTROL PISTON SPRING
21. VACUUM INLET
22. VACUUM VALVE
23. BEARING BUSH
24. NYLON SPACER
25. OUTPUT PISTON
26. VALVE CHEST
27. OUTPUT PISTON SPRING
28. OUTPUT CYLINDER
29. CAST BODY
30. VALVE SPRINGS
31. AIR VALVE
32. AIR INLET

Fig. 10. *Cross section view of Girling Vacuum Servo Unit*

GIRLING VACUUM SERVO UNIT

DESCRIPTION

The Girling Vacuum Servo Unit is installed in the brake hydraulic system between the master cylinder and the brake assemblies on the road wheels with the master cylinder pressure pipe connected to the vacuum servo unit and the servo hydraulic outlet is connected to the brake assemblies. The force required to augment the driver's effort is obtained by admitting atmospheric pressure to a vacuum cylinder containing a piston.

The pressure difference thus created across the piston produces a thrust load which is used to increase the hydraulic pressure available at the brake assemblies.

In the Girling Vacuum Servo Unit, the piston in the vacuum cylinder is normally subjected to vacuum on both sides and this principle is known as "Suspended Vacuum System". The vacuum is obtained from the inlet manifold of the engine and therefore servo assistance is only available while the engine is running.

Between the engine inlet manifold and the vacuum servo unit is a non-return valve which prevents air or petrol fumes entering the servo unit.

OPERATION (Fig. 10)

When air, at atmospheric pressure, is admitted to the vacuum cylinder (19) by a composite control valve the piston (5) drives the piston rod (18) and the output piston (25) down the hydraulic output cylinder (28) providing a considerable increase of hydraulic pressure to the brake assemblies on the road wheels.

The control valve, operated by hydraulic pressure from the master cylinder, exercises a precise control over the pressure increase and the brakes are applied exactly in proportion to the pressure applied to the foot pedal.

When the servo unit is at rest with no pressure in the hydraulic system, the vacuum valve (22) of the control valve is open and permits vacuum from the inlet manifold to temporarily communicate with the end cover side of the piston (5) in the vacuum cylinder (19) thus vacuum on both sides of the piston (5) is equal.

When pressure is applied to the brake pedal, hydraulic pressure is exerted throughout the braking system and equally on both ends of the valve control piston (10 and 13). As one end of this control piston is larger than the other, an equal pressure per square inch on both its ends causes a proportionally greater thrust to be exerted on the larger end moving the control piston and results in the "Tee"-shaped lever (11) opening the air valve (31) to the atmosphere and closing the vacuum valve (22).

Air is admitted to the end cover side of the piston (5) destroying the temporary vacuum, driving the piston (5) forward.

The piston rod (18) seals the centre hole in the output piston (25) and continued movement applies additional pressure to the hydraulic pressure proceeding to the brake assemblies and also to the small end of the valve control piston (13).

The movement of the output piston (25) continues until the thrust on the small end of the valve control piston (13) by the higher pressure to the brake assemblies, overcomes the thrust on the large end of the control piston (10), by the lower pressure from the master cylinder. The valve control piston (10 and 13) is thus moved back and closes the air valve (31); at this point both valves are closed and the brakes held on.

When the brake pedal is released the lower pressure from the master cylinder is reduced at the large end of the valve control piston (10) which moves back towards its rest position causing the "Tee"-shaped lever (11) to open the vacuum valve (22) drawing the air from the end cover side of the piston (5) in the vacuum cylinder (19), the piston (5) returns to its rest position and with it the output piston (25) relieving the hydraulic pressure in the brake assemblies. The piston rod (18) is withdrawn from the centre hole in the output piston (25) allowing a flow of hydraulic fluid between the brake assemblies and the fluid reservoir of the master cylinder.

If the brake pedal pressure was increased instead of being decreased the control valve operates to give additional assistance until the thrust on each end of the valve control piston is balanced or until the limit of available vacuum is reached. Conversely, if the pedal pressure is only reduced, the control valve operates to reduce the hydraulic pressure in the brake assemblies until, again, a state of balance of the valve control piston is reached.

SERVICING

Whenever possible the Girling Vacuum Servo Unit should be returned to the manufacturers for replacement but if this is not possible the renewing of all seals as contained in the Service Kit should provide a satisfactory unit providing **the internal working surfaces are in good condition.**

There should be no sign of corrosion, pitting, scoring or steps on the piston rod, pistons or bores and the surfaces should be smooth to the touch.

When dismantling, absolute cleanliness is essential. Wash the hands and lay out a clean sheet of paper on which to work and place the parts. Take care of all highly finished working surfaces on pistons, rods and bores. Clean hydraulic parts with Girling Cleaning Fluid or Commercial Methyl Alcohol and do not allow any other fluid, oil or grease to touch them. Special care should be exercised when removing or refitting the circlip in the hydraulic output cylinder and when reassembling the vacuum cylinder to the body.

To remove and refit

1. Remove the flexible vacuum hose from the top of the servo unit by withdrawing the banjo bolt and collecting two sealing washers.

2. Detach the two pressure pipes from the servo unit by releasing the union nuts and trapping any escaping fluid in a drip tray.

3. Detach the band round the vacuum cylinder from the bracket by removing a nut, washer and bolt.

4. Remove the servo unit from the mounting bracket by withdrawing three bolts and washers. No useful puspose is served by removing the brackets.

5. Refitting is the reverse of the removal sequence but particular attention must be given to the following:—

   (i) Check that the two brackets are secure.

   (ii) The vacuum pipe is secured with a new sealing washer each side of the banjo connection.

   (iii) The hydraulic system is bled of air, see under "Bleeding the hydraulic system" before the engine is started.

To dismantle and reassemble

1. Grip the servo unit in a vice by the two lower lugs on the cast body.

2. Remove the piston assembly (5) spring (6) gasket (1) and end cover (15) from the vacuum cylinder (19) by removing the transfer pipe retaining plate and seven nuts and bolts while controlling the pressure of the spring (6).

3. Remove the vacuum cylinder (19) and gasket from the cast body (29) by withdrawing three bolts, washers and a clamping plate and easing the grommet in the flange of the cylinder from the transfer pipe (17).

4. Remove the cover and transfer pipe (17) from the valve chest (26) by withdrawing four screws and washers.

5. Remove the valve retainer and flat horseshoe spring from inside the valve chest (26) by withdrawing two screws.

6. Withdraw the valves (22 and 31) and "Tee"-shaped lever (11) complete from inside the valve chest (26) by applying light pressure to the plug (8) in the end of the control piston bore.

7. Remove the cast body (29) from the vice and withdraw the control piston assembly from the top bore by tapping the mounting flange of the cast body on a wooden block.

8. Dismantle the control piston assembly by compressing the piston spring, easing off the circlip and removing the spring and retainers.

9. Remove the two seals from the control piston and one from the plug (8).

10. Withdraw the piston rod bearing bush (23) from the output piston bore and using a hooked tool remove the gland seal beneath followed by the nylon spacer (24).

11. Mount the cast body vertically in the vice by one of the mounting lugs and fit the compression tool to press the output piston (25) into the bore.

12. Using circlip pliers fully compress the circlip in the bore and carefully lift out the circlip exercising great care not to damage the bore, otherwise a brake failure may result.

13. Release the compression tool when the piston spring (27) will push out the washer followed by the output piston (25) the latter is then discarded.

14. Reassembly is the reverse of the dismantling sequence but particular attention must be given to the following:—

(i) All seals must be renewed and lubricated with Girling Brake Fluid; lubricate the bores and pistons with Girling Red Rubber Grease.

(ii) Fit a new output piston (25) as the piston rod seal can only be fitted during manufacture and confirm that the taper seal has the larger diameter nearer the reduced end of the piston.

(iii) Fit the spring (27) to the output piston (25) feed both into the bore, spring first, followed by the washer and hold in position with the compression tool and clip the tool under the mounting flange of the cast body (29).

(iv) Ensure that the circlip does not foul the side of the cylinder and fits snugly into its groove; this operation must be unhurried and the circlip pliers must be secure in the circlip, for any damage to the cylinder can result in brake failure. Remove the compression tool from the cast body.

(v) Fit the nylon spacer (25) into the bore, large end first, followed by the gland seal, lip end first, and finally fit the bearing bush (23).

(vi) Fit the control piston to the bore so the transverse hole aligns with the hole in the valve chest (26).

(vii) It is unlikely that the two nylon valves (22 and 31) will need renewing but when it is necessary their faces should be lapped on a piece of glass with a fine lapping paste to ensure they are airtight.

Fit the valves (22 and 31) and "Tee"-shaped lever (11) complete so the horsehoe spring location above the air valve (31) is away from the two securing screws inside the valve chest (26). It will be necessary to compress the end plug (8) to locate the end of the "Tee"-shaped lever (11) in the control position.

(viii) Fit a new rubber grommet in the flange of the vacuum cylinder (19) and locate a new gasket on the mounting face of the cast body (29).

(ix) Fit the vacuum cylinder (19) and clamping plate with the centre hole of the cylinder over the protruding bearing bush (23) and transfer pipe (17) ensuring there will be space over the grommet for the passage of air when the end cover (15) is fitted but leave the three bolts slack.

(x) Position the piston (5) and return spring (6) inside the vacuum cylinder (19) and push it down through the full stroke several times to align the bearing bush (23); remove the piston (5) and return spring (6) and tighten the three cylinder attachment bolts taking care not to displace the vacuum cylinder (19) on the flange of the cast body (29). If the cylinder is displaced it can cause the brakes to "hang-on".

(xi) Remove the sponge rubber backing ring (2) from the piston flange and fit the new one from the service kit. Smear the special lubricant, supplied with the kit, on the leather seal (3) of the piston (5).

(xii) Smear the piston rod (18) with Girling Red Rubber Grease and with the return spring in front offer up the assembly to the vacuum cylinder (19).

(xiii) Position the end cover (15) with a new gasket (1) on top of the piston (5) and press down, taking care the piston rod (18) enters the bearing bush (23) without damage.

(xiv) Secure the end cover (15) with the nuts and screws.

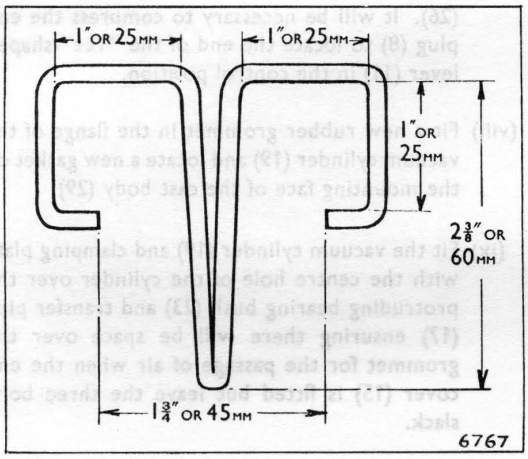

Fig. 11. *The compression tool*

COMPRESSION TOOL (Fig. 11)

The compression tool, necessary to compress the output piston, is made from a 12 in. (30 cm.) length of ⅛ in. (3 mm.) diameter iron wire.

Bend the wire back on itself in the centre to make the middle "leg" of the tool. Follow with the six other bends as shown in the illustration, finally cutting the two ends so there is 1¾ in. (45 mm.) between them.

The centre "leg" is inserted into the output cylinder bore and pressed down until the two ends can be sprung apart and clipped under the mounting flange of the cast body. The tool is then pushed aside towards the control cylinder bore to allow room to insert the circlip pliers.

TESTING EQUIPMENT

To make comprehensive tests, of the vacuum servo unit, requires complex and expensive equipment and this kind of testing is outside the capacity of many Service Workshops. A number of simple tests can be made when the servo unit is installed which gives some useful information and these tests are described hereafter. The only piece of equipment required is a ⅜ in. × 24 U.N.F. pipe union to fit into the hydraulic inlet port.

The use of these tests will assist in diagnoses and will provide assurance after servicing, but the tests are not exhaustive and so cannot equal the standard of the testing which is done in the factory by the specially designed equipment. When a vacuum servo unit gives cause for doubt it is always best to replace it with a factory tested unit whenever possible.

It is assumed that any faults connected with the brake system, such as fluid contamination, lack of adjustment, air in the hydraulic system, fluid leaks, etc., have been recognised and eliminated.

Test 1

1. Fit the servo unit to the mounting bracket and before connecting the air or fluid pipes, fit a bleed screw to the fluid outlet port and the special adaptor to the fluid inlet port.
2. Connect the vacuum pipe from the engine inlet manifold to the adaptor and remove the air filter element.
3. Start the engine and while "ticking over" place the fingers over the air inlet port of the air filter and the vacuum port to determine if there is any suction at either orifice, no suction should be experienced.
4. When suction can be detected, it indicates that the bores are scored or the components incorrectly assembled.
5. Remove the adaptor.

Test 2

1. Connect the vacuum pipe from the inlet manifold to the vacuum port.
2. Connect the fluid inlet and outlet pipes to their respective ports and bleed the hydraulic system of air.
3. Start and run the engine. While the brake is being applied, it should be possible to hear the hiss of the air inlet and with the hand on the vacuum cylinder feel the movement of the piston inside the vacuum cylinder.

Test 3

1. Start and run the engine for half a minute then switch off and leave for two minutes.
2. Apply the brake and the servo unit should operate and the operation should be detected as described in Test 2.

Test 4

Start and run the engine, apply the brake hard and hold it on for fifteen to twenty seconds. There should be no perceptible creep in the brake pedal.

If there is any creep, it indicates leaks or scored bores in the components.

Test 5

1. Jack up the front road wheels.
2. Start and run the engine.
3. Apply the brake and release.
4. The front road wheels should be free to move half a second after the release of the pedal.

Tests 2 to 5 can be used to test a suspect Vacuum Servo Unit before it is removed from the car.

IF THE RESULT IS UNSATISFACTORY ON:—

Test 2. It means the servo unit is not working at all, which could be caused by a lack of vacuum, possibly a faulty non-return valve, or a fault within the servo unit.

Test 3. It indicates leaking gaskets, air valve or rubber grommet. Clamp the vacuum hose and repeat Test 3. If satisfactory, the non-return valve is faulty. To test for a leaking air valve run the engine and place the finger over the air inlet. If the suction is only slight the air valve is satisfactory and the leak is elsewhere.

Test 4. The source of the trouble can only be found by elimination. Check for leaks. If no leak of hydraulic fluid is evident clamp each hose successively and repeat the test each time. Finally plug the master cylinder outlet and test. If creeping of the pedal is evident when the hoses are clamped and the pedal is solid when the master cylinder outlet is plugged, the servo unit is faulty.

Test 5. If the brakes remain on, disconnect the vacuum pipe, operate the brakes to eliminate all the vacuum in the servo unit and repeat the test. If the brakes remain on, the fault is not in the servo unit. If the brakes now release normally, the fault is in the servo unit and the alignment of the piston in the vacuum cylinder is suspect.

VACUUM NON-RETURN VALVE

A vacuum non-return valve is included in the banjo connection situated on top of the servo unit. Since it is not possible to dismantle the non-return valve, in the event of failure it must be renewed.

Its purpose is to preserve the vacuum in the servo unit and to prevent damage to it in the event of an engine backfire.

It consists of a spring-loaded valve which, in normal conditions, will be open due to the vacuum from the engine inlet manifold. When the vacuum from the inlet manifold becomes insufficient to preserve the vacuum in the servo unit, the spring-loaded valve will return to its seat.

To remove and refit

1. Remove the banjo connection and two copper washers from the top of the servo unit by withdrawing the banjo bolt.
2. Withdraw the banjo connection from the flexible hose by slackening off the hose clip.
3. Refitting is the reverse of the removal sequence but particular attention must be given to the following:—
   (i) The two copper washers, one each side of the banjo connection are not omitted.

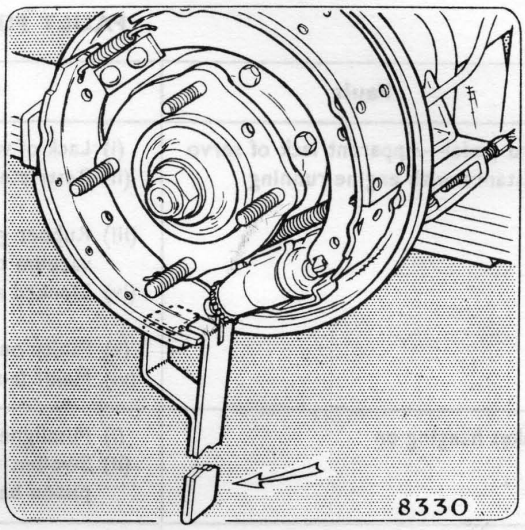

Fig. 12. *The Girling shoe horn applied to the toe end of the trailing brake shoe*

GIRLING SHOE HORN (Fig. 12)

The shoe horn, for the removal and refitting of the brake shoes, is marketed by Messrs. Girling Limited under Part number 64947013.

The shoe horn is applied to the toe end of the trailing brake shoe and levered forward as shown in the illustration to disengage or engage the brake shoe web in the slot of the tappet.

FAULT FINDING CHART

Fault	Cause	Action
Hard pedal—Apparent lack of servo assistance with engine running	(i) Lack of vacuum (ii) Restricted hose (iii) Rubber grommet in flange of vacuum cylinder (iv) Blocked air filter (v) Faulty output piston (vi) Major fault in servo unit	(i) Check vacuum connections (ii) Check hose and renew if necessary (iii) Fit new parts from Service Kit (iv) Examine air filter element and renew if necessary (v) Fit new parts from Service Kit (vi) Fit new servo unit
Brakes hanging on	(i) Misaligned vacuum piston (ii) Swollen rubber grommet or piston backing ring	(i) Check as Test No. 5 (ii) Fit new parts from Service Kit
Slow action of servo unit	(i) Swollen rubber grommet in flange of vacuum cylinder (ii) Blocked filter or restricted air inlet	(i) Fit new parts from Service Kit (ii) Examine air filter element and renew as necessary
Lack of servo assistance on heavy braking	Leak in servo vacuum	Check for leaks
Loss of fluid	(i) Failure of seal or seals (ii) Scored bore	(i) Fit new parts from Service KIt (ii) Fit new servo unit

MANUALLY ADJUSTED REAR BRAKES

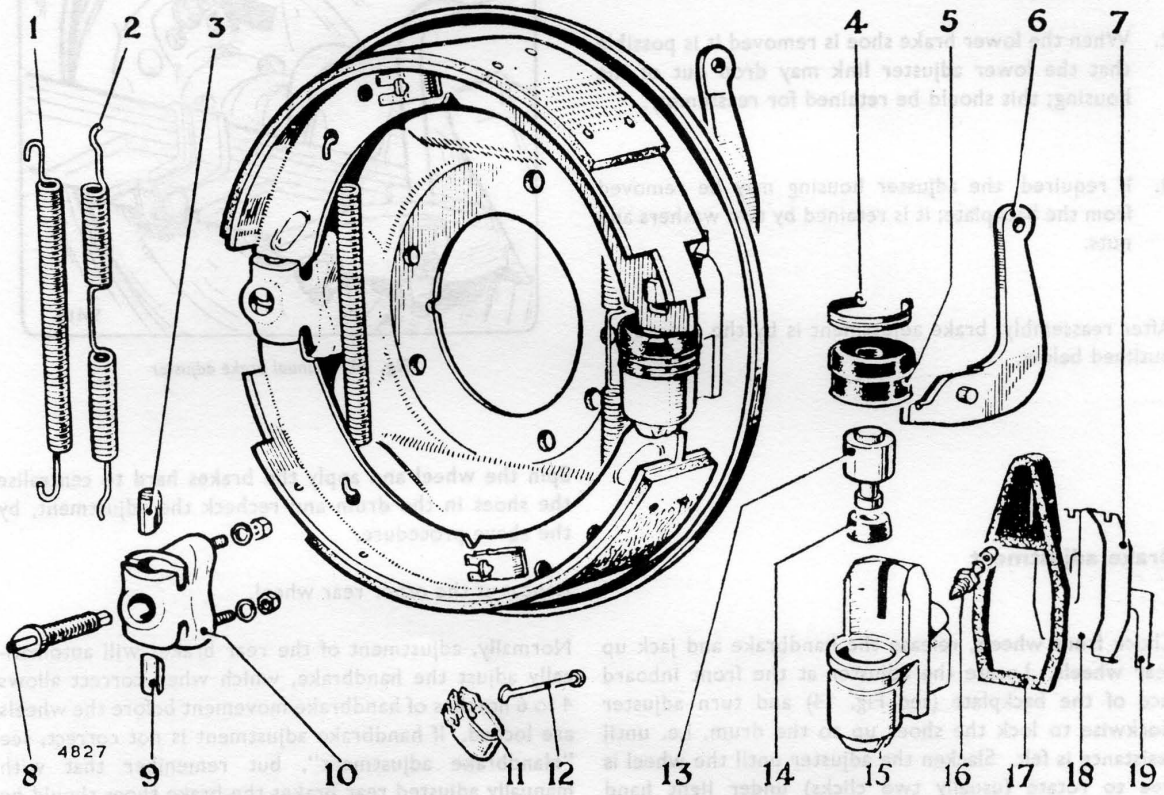

1. RETURN SPRING
2. RETURN SPRING
3. ADJUSTER LINK
4. DUST COVER CLIP
5. DUST COVER
6. HANDBRAKE LEVER
7. RETAINING PLATE
8. WEDGE
9. ADJUSTER LINK
10. ADJUSTER HOUSING
11. LEAF SPRING
12. PEG
13. PISTON
14. SEAL
15. CYLINDER BODY
16. BLEED SCREW
17. DUST COVER
18. SPRING PLATE
19. DISTANCE PIECE

Fig. 13. *Manually adjusted rear brake assembly*

Description

The difference between manually adjusted rear brakes and automatic adjusting rear brakes is in the wheel cylinder assemblies and the adjuster housing which replaces the fixed abutment in the automatic brake. Compare Fig. 13 with Fig. 2 of K2 which shows the automatic adjusting rear brake.

To remove and refit

The manually adjusted rear brake assembly is very similar to the automatic in this respect, see under K2 "Rear drum brakes—To remove and refit", but attention is drawn to the following differences:—

1. The steady post cap of the automatic assembly is replaced by a leaf spring, and removal is similar, depress the spring and turn the post.

2. When the lower brake shoe is removed it is possible that the lower adjuster link may drop out of the housing; this should be retained for reassembly.

3. If required, the adjuster housing may be removed from the backplate; it is retained by two washers and nuts.

After reassembly, brake adjustment is by the procedure outlined below.

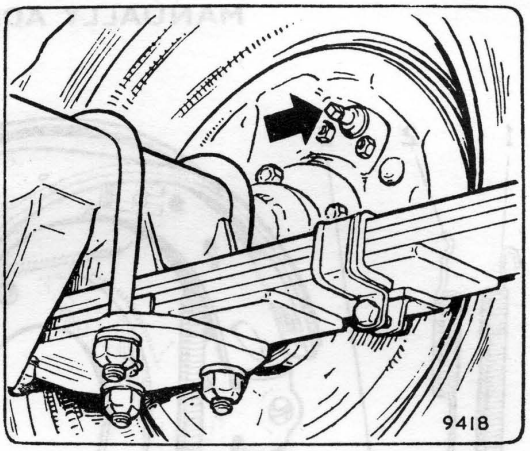

Fig. 14. *Manual brake adjuster*

Brake adjustment

Chock front wheels, release the handbrake and jack up rear wheels. Locate the adjuster at the front inboard face of the backplate (see Fig. 14) and turn adjuster clockwise to lock the shoes up to the drum, i.e. until resistance is felt. Slacken the adjuster until the wheel is free to rotate (usually two clicks) under light hand pressure

Spin the wheel and apply the brakes hard to centralise the shoes in the drum and recheck the adjustment, by the above procedure.

Repeat at the other rear wheel.

Normally, adjustment of the rear brakes will automatically adjust the handbrake, which when correct allows 4 to 6 notches of handbrake movement before the wheels are locked. If handbrake adjustment is not correct, see "Handbrake adjustment", but remember that with manually adjusted rear brakes the brake shoes should be locked up for the actual cable adjustment.