CLUTCH AND PROPELLER SHAFT

SECTION D

CONTENTS

CLUTCH AND PROPELLER SHAFT

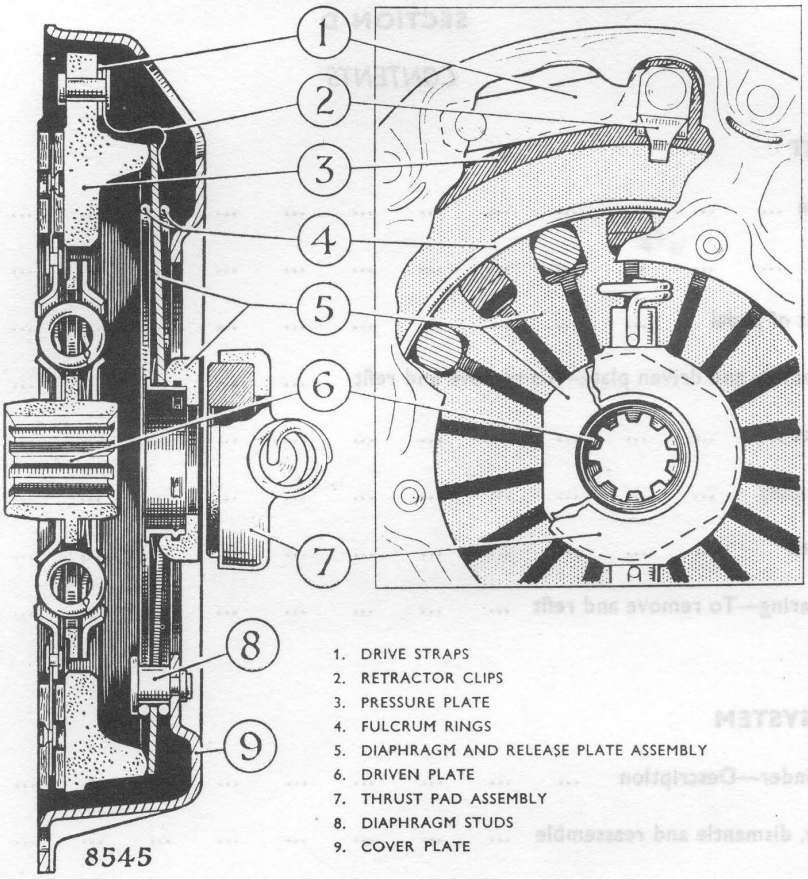

1. DRIVE STRAPS
2. RETRACTOR CLIPS
3. PRESSURE PLATE
4. FULCRUM RINGS
5. DIAPHRAGM AND RELEASE PLATE ASSEMBLY
6. DRIVEN PLATE
7. THRUST PAD ASSEMBLY
8. DIAPHRAGM STUDS
9. COVER PLATE

Fig. 1. *Sectional view of diaphragm clutch*

CLUTCH UNIT

DESCRIPTION (Figs. 1 and 2)

A single dry plate, diaphragm spring, strap drive clutch is fitted, incorporating a copper impregnated graphite release bearing, which is self-lubricating.

The assembly consists of a pressed steel cover (9) and a cast iron pressure plate (3) which are linked together by three steel straps (1). These are attached at one end to the cover, and at the other end to the pressure plate. The straps are arranged tangentially so that they can deflect during clutch operation, without disturbing the concentricity of the assembly, thus ensuring the maintenance of the initial correct balance.

The diaphragm spring is pinched between two fulcrum rings (4) which are secured to the cover by special rivets (8).

A release plate assembly (5) is attached to the diaphragm.

Finally, three retractor clips (2) riveted to the pressure plate, clip over the rim of the diaphragm spring, to ensure that the pressure plate retracts during clutch disengagement.

No servicing should be attempted on this assembly

The unit must be replaced, when necessary, by a complete assembly.

Do not lift or pull the clutch unit by means of the release plate.

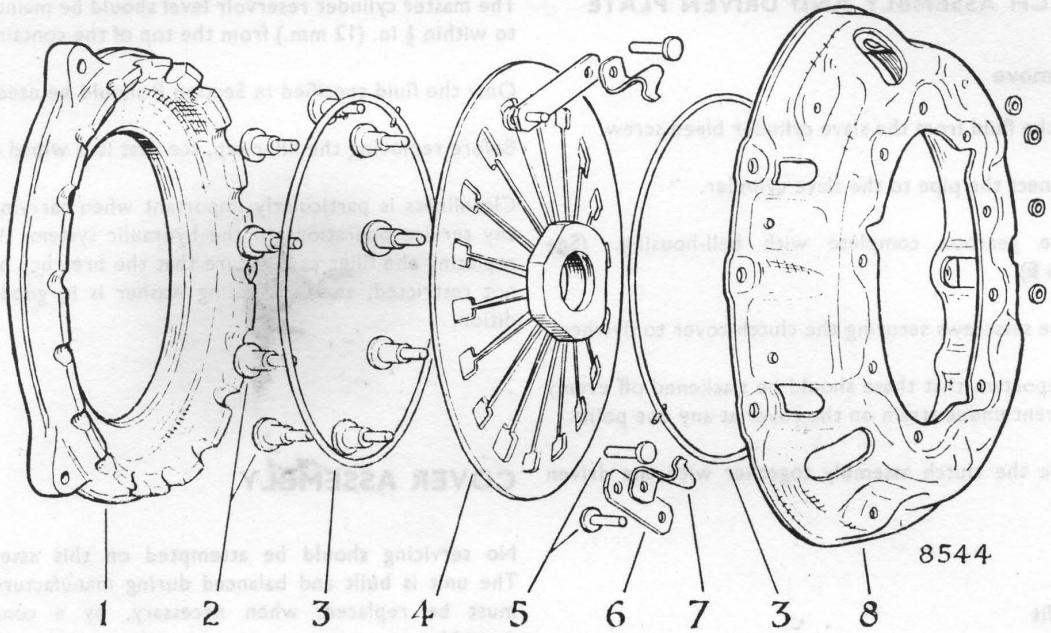

Fig. 2. *Exploded view of clutch assembly*

1. PRESSURE PLATE
2. DIAPHRAGM STUDS
3. FULCRUM RINGS
4. DIAPHRAGM AND RELEASE PLATE ASSEMBLY
5. RIVETS
6. DRIVE STRAPS
7. RETRACTOR CLIP
8. COVER PLATE

OPERATION

When the cover assembly and driven plate are bolted to the flywheel, the diaphragm spring comes under installation load, and is deflected from its free shallow coned profile to an approximately flattened condition. This deflection, via the fulcrum ring, provides the load on the pressure plate. Pressure on the release plate will further deflect the diaphragm spring, retracting the periphery due to the leverage about the inner fulcrum ring.

This action results in the diaphragm spring load being relieved from the pressure plate, thus disengaging the clutch.

The clutch is operated hydraulically by a hydrostatic slave cylinder. No adjustment is necessary or provided for at the slave cylinder.

The operating mechanism consists of a master cylinder, connected directly to the pedal, and a hydraulic fluid pipe running to the slave cylinder, which in turn is attached by a push rod to the withdrawal lever.

Provision for bleeding the system is made on the slave cylinder.

Adjustment of pedal free play

Measure the clutch pedal free play, using feeler gauges between the pedal stem and the pedal stop, located behind the parcel tray. This should be ·045 in. (1·15mm). Adjust as follows:—

Push back the pedal return spring and cap and loosen the master cylinder push rod lock nut, holding the push rod by the two flats provided. (See Fig. 3). Turn the push rod until the correct clearance has been obtained.

Turning clockwise will reduce the clearance, anti-clockwise will increase the clearance. When correct re-tighten the locknut.

Any alteration to the setting of the pedal stop will affect both the clutch and brake pedal clearances, and should be left undisturbed as far as possible. If it is necessary to remove the stop, mark the position and re-check the pedal clearances after re-fitting.

CLUTCH ASSEMBLY AND DRIVEN PLATE

To remove

Drain the fluid from the slave cylinder bleed screw.

Disconnect the pipe to the slave cylinder.

Remove gearbox complete with bell-housing. (See Section E).

Remove setscrews securing the clutch cover to flywheel.

It is important that these should be slackened off evenly to prevent undue strain on the cover at any one point.

Remove the clutch assembly together with the driven plate.

To refit

When refitting, the clutch driven plate is marked "this side to flywheel". Lubricate the splines with waterproof grease, such as Shell SB.2498.

Place the driven plate in position using Tool No. RG.41 or a spare primary shaft, thus centralising the plate when the clutch is fitted.

This instruction must be strictly adhered to, otherwise it will be impossible to enter the gearbox primary shaft when fitting the gearbox.

Locate the clutch cover on the dowels, and tighten the securing screws evenly and diagonally.

Remove the tool or primary shaft, and refit the gearbox, complete with bell-housing (See Section E).

Refit the pipe to the slave cylinder, refill the master cylinder with fluid (see Section P), and bleed the system (see "Bleeding the system").

MAINTENANCE

The only maintenance required is to ensure that the hydraulic system has an adequate supply of fluid, and should the pedal become spongy, the system must be bled. (See "Bleeding the system").

The master cylinder reservoir level should be maintained to within ½ in. (12 mm.) from the top of the container.

Only the fluid specified in Section P should be used.

Before removing the filler cap, see that it is wiped clean.

Cleanliness is particularly important when carrying out any service operations to the hydraulic system. When replacing the filler cap, ensure that the breather hole is not restricted, and the sealing washer is in good condition.

COVER ASSEMBLY

No servicing should be attempted on this assembly. The unit is built and balanced during manufacture and must be replaced, when necessary, by a complete assembly.

CLUTCH DRIVEN PLATE

Examine the driven plate for wear or damage as follows:—

1. The internal splines of the hub for wear, by placing the driven plate on a new gearbox primary shaft, and checking for backlash. If excessive, renew the plate.
2. Check for ridging of the friction linings, oil on the linings, or worn down to the rivets.
3. Check the pressure plate face and the flywheel for ridges. If ridged, the flywheel may be removed and refaced, but the clutch-driven plate and cover assembly must be renewed.

RELEASE BEARING

The release bearing assembly is retained to the clutch fork by two spring steel clips located into the end of the thrust pad spigots.

MASTER CYLINDER

DESCRIPTION

This unit (Fig. 3) incorporates a fluid reservoir and a master cylinder. Directly in front of the main cup (8), when the system is at rest, is a by-pass port (X) which ensures that the system is full of fluid at all times and compensates for the expansion and contraction of fluid due to changes of temperature. It also serves to release additional fluid drawn into the cylinder from the annular space formed by the reduced skirt of the piston (10) through the holes in the piston head, after each clutch application.

If this additional fluid is not released to the reservoir through the by-pass port, due either to the hole being covered by the main cup, as a result of incorrect pedal adjustment, or to the hole being choked by foreign matter, pressure will build up in the system.

In order that the rubber cup shall not be drawn into the holes in the piston head, a piston washer (9) is interposed between the two parts. *It is important that this washer be assembled as shown in Fig. 3.*

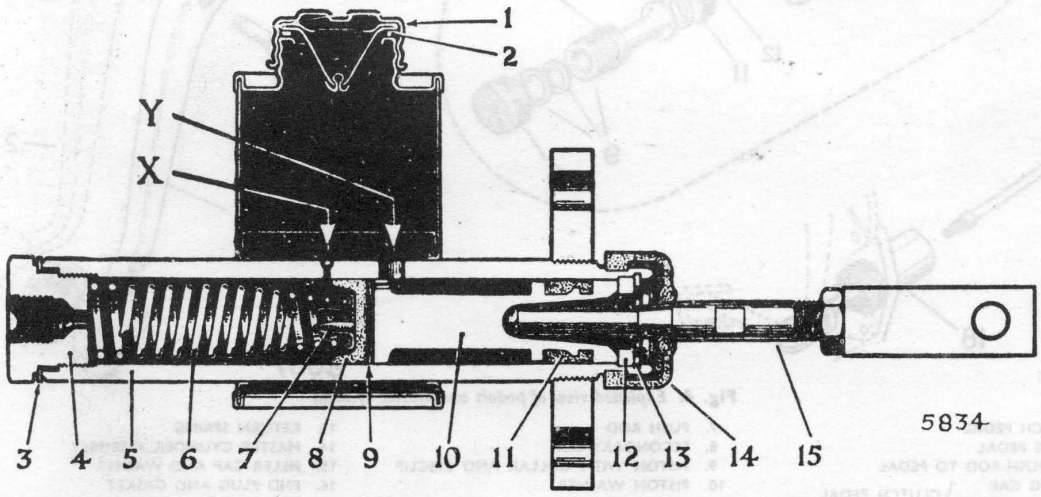

Fig. 3. *Sectional view of master cylinder*

1. FILLER CAP
2. WASHER
3. GASKET
4. OUTLET PLUG
5. BODY
6. SPRING
7. SPRING RETAINER
8. MAIN CUP
9. PISTON WASHER
10. PISTON
11. PISTON COLLAR
12. SECONDARY CUP
13. CIRCLIP
14. RUBBER BOOT
15. PUSH ROD ASSEMBLY

Y. MAIN PORT
X. BY-PASS PORT

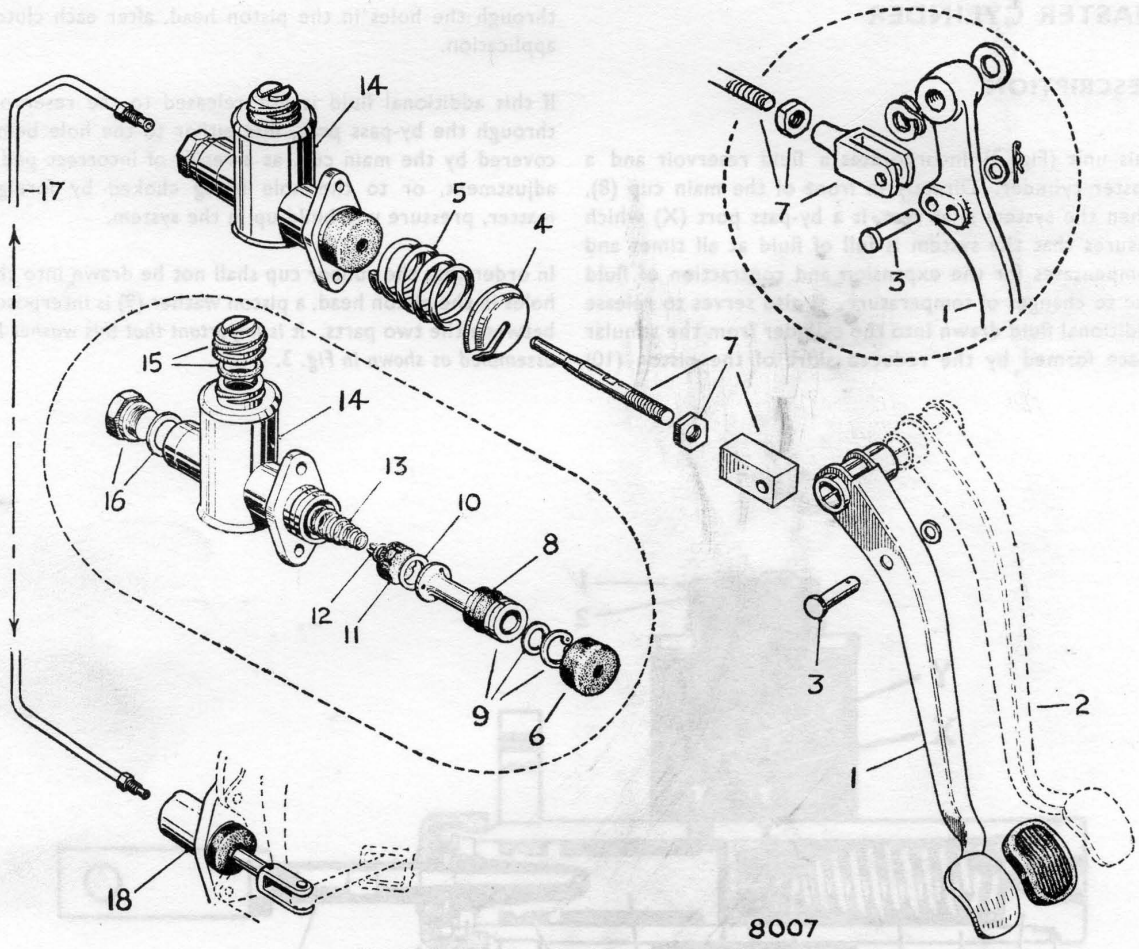

Fig. 4. *Exploded view of pedals and master cylinder*

1. CLUTCH PEDAL
2. BRAKE PEDAL
3. PIN, PUSH-ROD TO PEDAL
4. SPRING CAP } CLUTCH PEDAL
5. RETURN SPRING } CLUTCH PEDAL
6. RUBBER BOOT
7. PUSH ROD
8. SECONDARY CUP
9. PISTON WITH COLLAR AND CIRCLIP
10. PISTON WASHER
11. MAIN CUP
12. SPRING RETAINER
13. RETURN SPRING
14. MASTER CYLINDER ASSEMBLY
15. FILLER CAP AND WASHER
16. END PLUG AND GASKET
17. PIPE, MASTER CYLINDER TO SLAVE CYLINDER
18. SLAVE CYLINDER

To remove (Fig. 4)

Drain the fluid from the bleed screw on the slave cylinder (5, Fig. 6).

Disconnect the pressure pipe (17) from the cylinder barrel, and remove the rubber boot (6).

Remove the fixing bolts. The push rod (7) can be left attached to the clutch pedal.

To dismantle (Fig. 6)

Remove the circlip (9), piston collar (9), and withdraw the piston (9), washer (10), main cup (11), spring retainer (12) and return spring (3). Using only the fingers to prevent damage, remove the secondary cup (8) by stretching it over the end flange of the piston.

To assemble (Fig. 4)

Fit the secondary cup (8) to the piston (9) so that the lip of the cup faces the piston head, and gently work the cup round the groove with the fingers, to ensure that it is properly seated. Assemble the spring retainer (12) on the smaller end of the return spring (13) and insert the assembly into the cylinder. Insert the main cup (11) into the cylinder, lip foremost, taking care not to damage or turn back the lip of the cup; follow up with the piston washer (10), paying particular attention to the illustration showing the method of assembly (Fig. 5). Press the piston (9) into the cylinder, taking care not to damage or turn back the lip of the secondary cup (8). Fit the collar (9) and the circlip (9).

Fill the reservoir with clean fluid (see Section P), and test the master cylinder by pushing the piston inwards and allowing it to return unassisted; after a few applications fluid should flow from the outlet in the cylinder head.

Drain the fluid before refitting.

To refit (Fig. 5)

Fit the rubber boot (6) on to the cylinder (14) so that the vent hole in the boot is at the bottom with the cylinder fitted to the car.

Attach the master cylinder to the mounting bracket, making sure that the push rod is located in the piston, and refit the pressure pipe. Fill with fluid and bleed the system (see "Bleeding the system"). Check for leakage by applying firm pressure to the pedal, and inspecting the pipe run and connections.

SLAVE CYLINDER

DESCRIPTION (Fig. 6)

The slave or operating cylinder works on a similar principle to the hydraulic brake wheel cylinder and consists of the following parts:—

A main body or cylinder assembly, inside which operates a piston (9), rubber cup (8), cup filler (7), return spring (4), operating push rod (1) and a rubber boot (2).

A bleed screw (5) provides the only means of bleeding the system.

The operating push rod (1) is connected directly to the withdrawal lever by a clevis pin. No adjustment is necessary or provided for, between the release bearing and the release plate, as the design of the slave cylinder maintains the clutch release bearing in light contact with the release plate when the clutch is in the fully engaged position.

To remove

Drain the fluid at the bleed screw.

Disconnect the pipe (17, Fig. 5). Remove the retaining screws. The push rod may be left attached to the withdrawal lever.

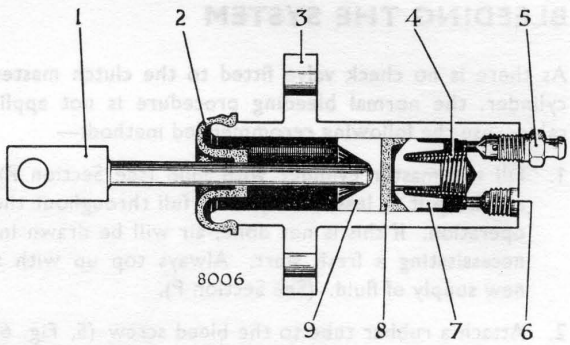

Fig. 6. *Sectional view of slave cylinder*

1. PUSH ROD
2. RUBBER BOOT
3. BODY MOUNTING FLANGE
4. RETURN SPRING
5. BLEEDER SCREW
6. FLUID OUTLET BORE
7. CUP FILLER
8. PISTON CUP
9. PISTON

To dismantle

Remove the rubber boot from the end of the cylinder.

Apply a LOW air pressure to the fluid connection to expel the internal parts.

To assemble

Fit the spring (4) in the cup filler (7) and insert these parts, spring first, into the body. Follow up with the cup (8), lip leading, making sure that the lip is not turned back or buckled, finally inserting the piston (9), flat face innermost.

Fit the rubber boot.

To refit

Offer up the slave cylinder to the mounting with the bleed screw uppermost, the push rod entering the body, and fit the fixing screws. Refit the fluid pipe, refill the master cylinder with fluid (see Section P), and bleed the system (see "Bleeding the system").

BLEEDING THE SYSTEM

As there is no check valve fitted to the clutch master cylinder, the normal bleeding procedure is not applicable—use the following recommended method:—

1. Fill the master cylinder with fluid (see Section P), and keep it at least one quarter full throughout the operation. If this is not done, air will be drawn in, necessitating a fresh start. Always top up with a new supply of fluid. (See Section P).
2. Attach a rubber tube to the bleed screw (5, Fig. 6) in the slave cylinder, allowing the free end to be submerged in a little fluid in a clean glass jar.
3. Slacken the bleed screw and depress the clutch pedal slowly. Tighten the screw before the pedal reaches the end of the stroke and allow the pedal to turn unassisted.
4. Repeat operation 3 until air bubbles cease to appear from the end of the tube in the jar.
5. During the downstroke of the pedal, tighten the bleed screw sufficiently to seat it. DO NOT use excessive force.

   Remove the bleed tube and replace the dust cap on the bleed screw.

PROPELLER SHAFT

GENERAL

A needle roller bearing propeller shaft is fitted to the car.

All bearings are sealed and do not require lubrication during the life of the component.

The sliding spline portion is enclosed within the rear end of the gearbox, and is thus lubricated by the gearbox system.

To remove and refit

Remove the nuts from the rear axle coupling.

Place a drip tray under the rear of the gearbox to catch any oil which may run out.

Pull the shaft forward to clear the rear axle coupling, then lower, and withdraw the shaft rearwards.

Before refitting, which is the reverse of the above procedure, ensure that the splines, and the outer portion of the sliding spline are free from grit or sharp edges, and lightly lubricated.

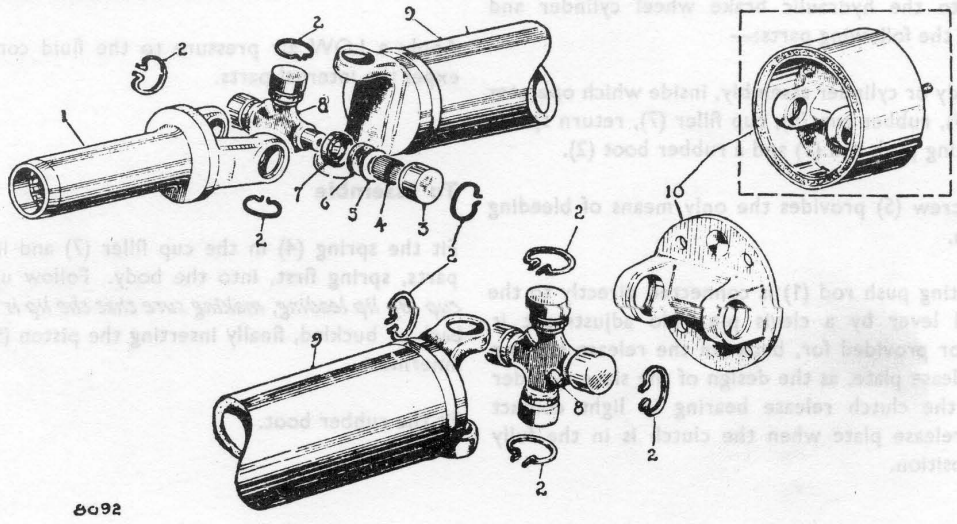

Fig. 7. *Exploded view of propeller shaft*

1. SLEEVE YOKE
2. SNAP RING
3. BEARING CAP
4. NEEDLE ROLLERS
5. GREASE RETAINER
6. GASKET
7. GASKET RETAINER
8. JOURNAL
9. PROPELLER SHAFT
10. COUPLING FLANGE (ALTERNATIVES)

UNIVERSAL JOINTS

The needle bearing universal joints are so designed that correct assembly is a very simple matter, no hand fitting or special tools being required.

Individual parts of any needle roller bearing assembly should not be renewed singly. If replacement is necessary a complete journal pack should be fitted. In certain territories where journal packs are not available, overhaul procedure will have to be carried out. The complete dismantling and reassembly procedure is given below:—

To dismantle

Mark the couplings, and reassemble to the marks.

Remove snap rings by pinching together with pliers. If the ring is stiff to remove, clean out any surplus enamel, and tap the end of the bearing assembly lightly, which will relieve pressure on the ring.

Holding the joint in one hand, tap gently with a soft hammer on the radius of the ear of the yoke.

The needle bearing assembly will gradually emerge, and can be removed with the fingers. Be sure to hold the assembly vertical and remove the roller bearing from the bottom, to avoid dropping the needle rollers.

Repeat this operation for the opposite bearing.

Support the exposed journal pegs on lead blocks (to protect the ground face), and tap the ears of the flange yoke to remove the needle roller assembly.

Reverse the propeller shaft assembly and repeat the operation.

Wash all parts in petrol or paraffin.

It is essential that no play exists between the roller races and the bores of the yokes. If the yoke cross-holes have worn oval, the yokes must be replaced.

In the case of the inner yokes, renewal can only be effected by renewing the propeller shaft, since the yokes are welded to, and balanced with, the tubular shaft.

If parts are not worn, repack with Retinax "A". With the rollers in position fill the race about one third full.

Install all new gaskets and seals on the journal assembly.

The journal shoulders should be coated with jointing compound to ensure a good seal.

To reassemble

Insert journal in flange yoke holes. Using a soft round drift, about $\frac{1}{32}$ in. (·8 mm.) smaller in diameter than the hole in the yoke, tap the bearing assembly into position.

Repeat this operation for the other three assemblies.

Fit new snap rings, and make sure they are seated in the grooves.

When assembled, tap lightly all round to relieve any pressure on the bearing assemblies.