FUEL SYSTEM

CONTENTS

CONTENTS—*continued*

FUEL PUMP

The A.C. mechanically operated pump is mounted on the right-hand side of the engine and operated by an eccentric on the camshaft. A gauze filter and glass cover bowl are incorporated with the pump.

DETAILS OF OPERATION (See Fig. 1)

As the engine camshaft revolves an eccentric (7) actuates the fuel pump rocker arm (6) pivoted at (8) which pulls the pullrod (11) together with the diaphragm (13) downwards against spring pressure (12) thus creating a depression in the pump chamber (15). Fuel drawn from the tank enters the glass bowl from the pump intake (3). After passing through the filter gauze (17) and the inlet valve (1) it enters the pump chamber (15).

On the return stroke, pressure of the spring (12) pushes the diaphragm (13) upwards forcing fuel from the chamber (15) through the outlet valve (16) and outlet (14) to the carburettor. When the

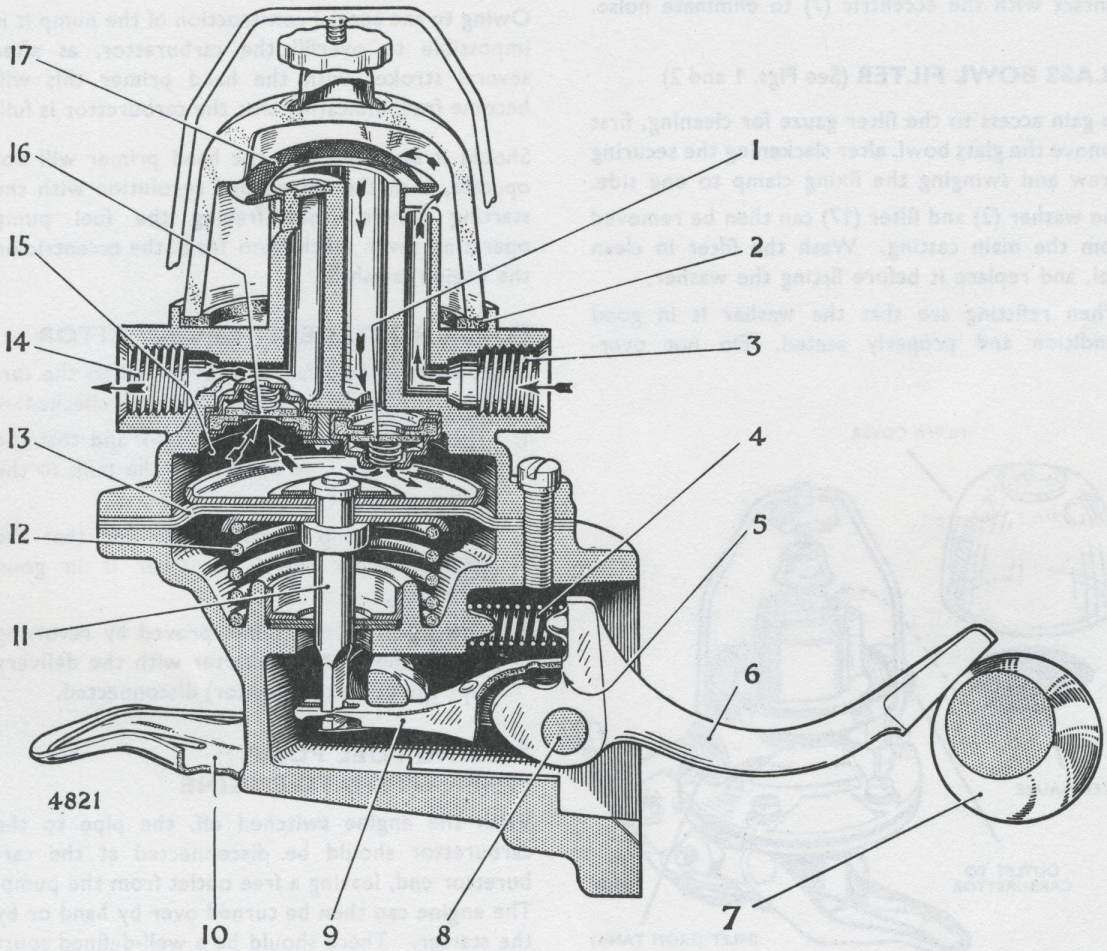

Fig. 1. *Sectional view of fuel pump and fuel filter*

carburettor bowl is full the float will shut the needle valve, thus preventing any flow of fuel from the pump chamber (15). This will hold the diaphragm (13) downwards against the spring (12) pressure and it will remain in this position until the carburettor requires further fuel and the needle valve opens.

The rocker arm (6) operates the connecting link (9) by making contact at (5) and this construction allows idling movement of the rocker arm when there is no movement of the fuel pump diaphragm.

The spring (4) keeps the rocker arm (6) in constant contact with the eccentric (7) to eliminate noise.

GLASS BOWL FILTER (See Figs. 1 and 2)

To gain access to the filter gauze for cleaning, first remove the glass bowl, after slackening the securing screw and swinging the fixing clamp to one side.

The washer (2) and filter (17) can then be removed from the main casting. Wash the filter in clean fuel, and replace it before fitting the washer.

When refitting see that the washer is in good condition and properly seated. Do not over-tighten the securing screw or the excessive pressure will cause rapid deterioration of the joint.

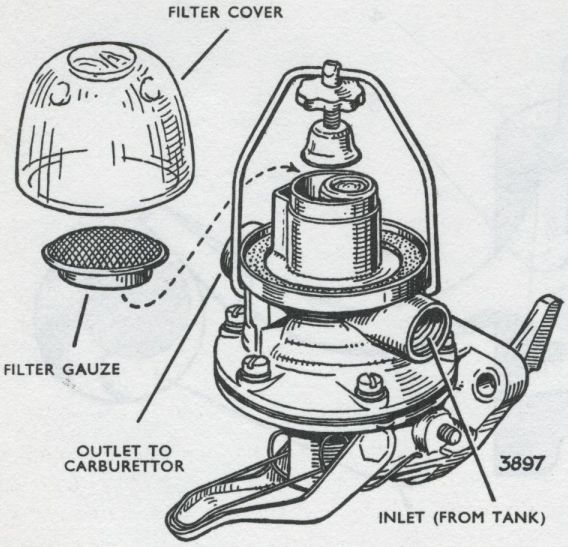

Fig. 2. *Fuel pump filter*

HAND PRIMER

The hand primer shown in Fig. 2 is for use when, for any reason, the carburettor float chamber or pump bowl has become empty. A few pulls upwards of the hand primer on these occasions will fill the float chamber with fuel and ensure easy starting without prolonged use of the starter and consequent excessive drain on the battery.

Owing to the special construction of the pump it is impossible to overfill the carburettor, as after several strokes with the hand primer this will become free, indicating that the carburettor is full.

Should it be found that the hand primer will not operate, turn the engine one revolution with the starting handle, thus freeing the fuel pump operating lever mechanism from the eccentric on the engine camshaft.

FUEL SHORTAGE AT CARBURETTOR

If the pump should fail to deliver fuel to the carburettor the following points should be checked:—

1. That fuel is available in the tank and that the unions in the pipe connecting the tank to the pump are tight.
2. That the pump filter is clean and that the washer below the filter cover is in good condition.
3. The action of the pump, proved by revolving the engine with the starter with the delivery pipe (pump to carburettor) disconnected.

TESTING FUEL PUMP WHEN FITTED TO ENGINE

With the engine switched off, the pipe to the carburettor should be disconnected at the carburettor end, leaving a free outlet from the pump. The engine can then be turned over by hand or by the starter. There should be a well-defined spurt of fuel at every working stroke of the pump, that is once every two revolutions of the engine.

TO REMOVE FUEL PUMP FROM ENGINE

Disconnect the fuel pipes by undoing their unions on the fuel pump body. Remove the two nuts holding the pump to the engine crankcase and lift away pump carefully noting the number of joints used between the pump mounting face and the crankcase face.

TO DISMANTLE FUEL PUMP (See Fig. 4)

Before commencing to dismantle the pump thoroughly clean the exterior and make a mark across the two flanges of the pump housing, as a guide when reassembling.

Remove the six securing setscrews (11) and separate the two halves of the main casting.

Turn the diaphragm and pull-rod assembly (13) through an angle of 90°, when it may be disconnected from its securing slot in the connecting link (20) and withdrawn. Remove diaphragm spring (14).

Do not attempt to separate the four diaphragm layers.

Remove one circlip (24) from the rocker arm pin and withdraw the pin (23).

The rocker arm (22) together with the connecting link (20), spring (21) an washers (19) may now be removed.

Withdraw the valve retainer screw (10) from inside the upper casting and remove the retainer plate (9), valve assemblies (7) and valve retainer gasket (8).

INSPECTION OF PARTS

Thoroughly clean all parts in paraffin. Those parts that comprise the valve assemblies and retainers should be washed separately from the other dirtier components.

The diaphragm and pull rod assembly should be renewed if there is any sign of hardening or cracking.

Where any part of the hand priming mechanism is broken the complete set of parts must be renewed, the outer ends of the spindle being riveted over by hand tools after correctly locating the various components.

All badly worn parts must be renewed and very little wear may be tolerated on the rocker arm pin, holes and engagement slot in link, holes in rocker arm, contact face of rocker arm or pull rod.

The valve assemblies cannot be dismantled but should be tested for air-tight seatings by suction, and renewed where necessary.

Check the valve retaining joint very carefully for damage or distortion; it is advisable to renew this gasket after dismantling as any fault preventing correct seating of the valve assembly will greatly decrease the efficiency of the pump.

Test the diaphragm spring, although this seldom requires replacement. Where necessary ensure that the replacement spring has the same identification colour and consequently the same strength as the original.

All gaskets and joints should be renewed as a matter of routine, including the fabric oil seal washers located round the diaphragm pull-rod.

TO REASSEMBLE FUEL PUMP

Refit valve retainer gasket, valves, valve retainer, and secure in position with two retaining screws. The valves must be assembled in the pump as illustrated in Fig. 1. If fitted in any other way the pump will not operate.

Assemble link, packing washers, rocker arm and rocker arm spring in the body.

Insert rocker arm pin through the hole in the body, at the same time engaging the packing washers, link, and the rocker arm, then spring the retaining clips into the grooves on each end of the pin. The rocker arm pin should be a tap fit in the body.

The fitting of the rocker arm pin can be simplified by first inserting a piece of 0·240″ (6 mm.) diameter rod through the pin hole in one side of the body far enough to engage the rocker arm washers and link, and then pushing the rocker arm

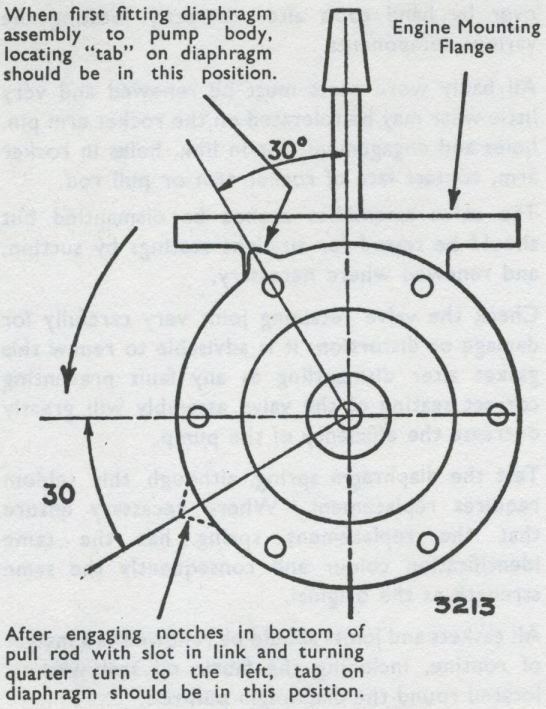

Fig. 3. *Fitting diaphragm assembly*

pin in from the opposite side, removing the temporary rod as the pin takes up its proper position.

Place the diaphragm spring in position in the pump body. Place the diaphragm assembly over the spring (the pump rod being downwards) and centre the upper end of the spring in the lower protector washer.

Press downwards on the diaphragm, at the same time turning the assembly to the left in such a manner that the slots on the pull rod will engage the fork in the link, ultimately turning the assembly a complete quarter turn to the left, which will place the pull rod in the proper working position in the link, and at the same time permit the alignment of the holes in the diaphragm with those in the pump body flanges. When first inserting the diaphragm assembly into the pump body, the locating "tab" on the outside of the diaphragm should be at the position shown in Fig. 3. After turning the diaphragm assembly a quarter turn to the left the "tab" should be in the position indicated by the dotted outline.

The sub-assemblies of the pump are now ready for fitting together, and this is carried out as follows:—

Push the rocker arm towards the pump until the diaphragm is level with the body flanges.

Place the upper half of the pump into the proper position, as shown by the mark made on the flanges before dismantling.

Install the cover screws and spring washers and tighten until the heads of the screws just engage the washers.

Important

Before finally tightening screws, push rocker arm towards pump using about a 4″ (10 cms.) length of tube slipped over the end of the rocker arm so as to hold the diaphragm at the bottom of its stroke. Hold in this position and tighten screws alternately. After assembly the edges of the diaphragm should be about flush with the two clamping flanges.

Any appreciable protrusion of the diaphragm indicates incorrect fitting, in which case special care should be paid to maintaining inward pressure on the rocker arm while the diaphragm screws are finally tightened alternately and securely.

Refit filter gauze and cork seating gasket in position.

Refit filter bowl as previously described.

TO TEST FUEL PUMP AFTER ASSEMBLY

The best method is by using an AC-Sphinx bench test stand, on which the suction side of the pump is piped to a tin of paraffin (kerosene) at floor level and the outlet side of the pump connected to a stop tap and pressure gauge.

First, flush the pump through to wet the valves and seats, and then completely empty it again by continuing to operate the rocker arm by hand with

the suction pipe clear of the paraffin (kerosene.) Again operate pump. Not more than 16 strokes should be necessary to secure delivery of paraffin from the pump outlet.

With the same apparatus a second test can be made by working the pump with the tap on the delivery side closed, pressure then being recorded on the gauge. After ceasing to work the pump it should take several seconds for this pressure to return to zero, thus denoting that the valves are seating properly. Also, while there is pressure, the outer edge of the diaphragm—visible between the two clamping flanges—should be carefully examined for leakage and the retaining screws tightened if necessary. When working the pump by hand a somewhat longer stroke is obtained and the pressure developed is apt to be higher than when fitted to the engine.

When the above apparatus is not available the pumps should be tested, using a pan of clean paraffin as follows:—

> Flush the pump by immersing it in the paraffin and working the rocker arm half a dozen times, then empty the pump by continuing to operate it while held above the bath. Then with the pump clear of the paraffin bath, place the finger over the inlet union (marked "in") and work the rocker arm several times. Upon removing the finger a distinct suction noise should be heard, denoting that the pump has developed a reasonable degree of suction. Afterwards the finger should be placed over the outlet union and after pressing the rocker arm inwards the air drawn into the pump chamber should be held under compression for two or three seconds; this should be done with the pump immersed in paraffin and the clamping flanges of the diaphragm watched for any signs of air leakage.

TO REFIT PUMP TO ENGINE

Reverse the procedure outlined for removal from engine. Ensure that the rocker arm is correctly positioned. After refitting the pump, the engine should be run for a short time and pipe unions and pump examined for any signs of fuel leakage.

EXCESSIVE FUEL PUMP PRESSURE

As explained under, "Details of Operation" the pressure of fuel on the carburettor is determined by the spring (12, Fig. 1), and the further this spring is compressed the greater will be the pressure. All parts of the pump and the cylinder block are machined to definite limits, and if all the lower limits exist on one particular engine, the spring will be compressed on the downward stroke to a greater extent than is normal, resulting in an excess pressure at the carburettor.

Excessive fuel pump pressure can be a cause of heavy fuel consumption. This can be checked and if necessary rectified as follows:—

1. Disconnect the pipe to the carburettor at the pump.
2. A mercury manometer or a suitable reliable pressure gauge calibrated up to 6 lb. per sq. in. (0·422 kg. per sq. cm.) should then be connected to and as near as possible, on the same level with the outlet on the pump.
3. Rotate the engine on the starter, and a reading similar to that given in the Data Section under "Fuel System" should be recorded on the gauge.

To remedy excessive output pressure additional packings should be fitted between the fuel pump flange and cylinder block pump mounting face.

Excessive output pressure can be caused by stiffening up of the pump diaphragm, and diaphragm condition should be checked on any pump that has been in service for a long time.

Care should be taken to avoid the use of an excessive number of packings as this can cause fuel starvation under full throttle conditions.

The pump output pressure should always be rechecked after adding packings.

Important Note

It must be clearly understood that the actual mounting on the engine affects the output pressure of the pump and thus these tests cannot be carried out unless the pump is mounted in its normal position. The use of jigs or other fixtures for testing A.C. pumps will not necessarily give the same results.

1 Body.
2 Retainer—glass cover.
3 Glass bowl.
4 Gasket—bowl.
5 Cover.
6 Filter gauze.
7 Valve.
8 Gasket—valve.
9 Retaining plate—valve.
10 Screw—valve retainer.
11 Screw No. 10 U.N.F.
12 Washer $\frac{3}{16}$" spring.
13 Pull rod and diaphragm.
14 Spring—diaphragm.
16 Priming lever.
17 Washer—oil seal.
18 Retainer—oil seal.
19 Washer—rocker pin.
20 Link.
21 Return spring rocker arm.
22 Rocker arm.
23 Pin—rocker arm.
24 Circlip—rocker arm pin.
25 Primer spring.
26 Joint pump to insulator.
27 Heat insulator.
28 Joint—insulator to cylinder block.
29 Outlet union.
30 Banjo bolt.
31 Fibre washer.

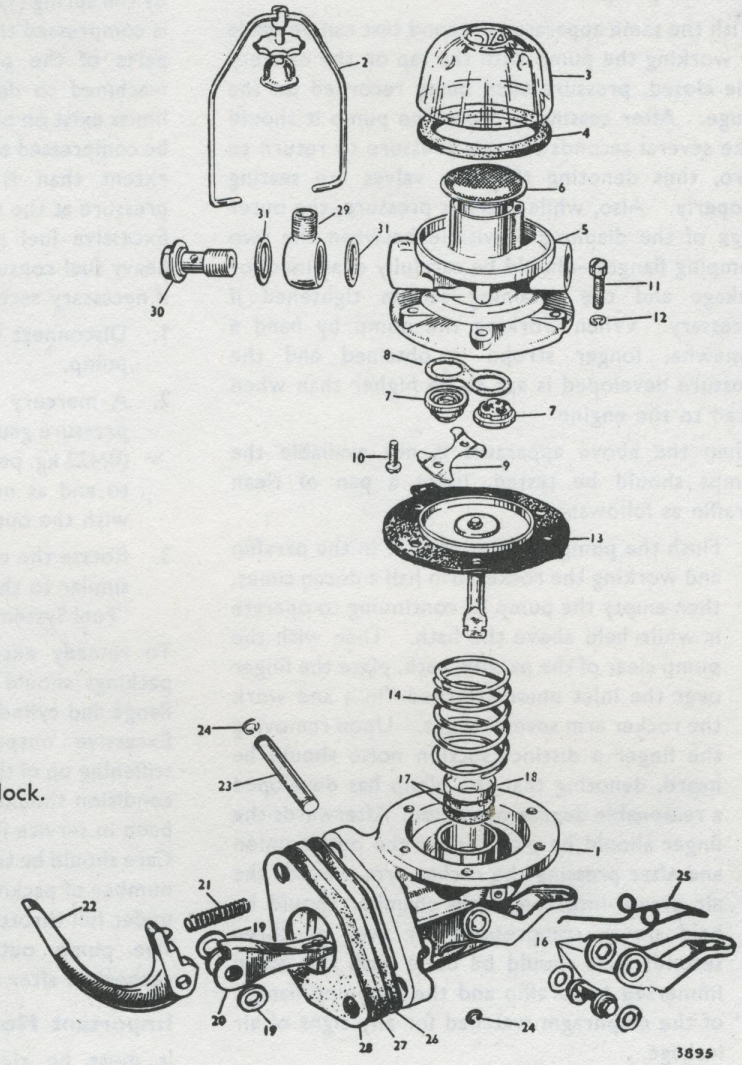

Fig. 4. *Exploded view of fuel pump*

CARBURETTOR

GENERAL DESCRIPTION

The following carburettors and air cleaners are fitted as standard equipment

Alpine

Twin Zenith WIP 36 downdraught carburettors fitted with separate removable gauze type air intake filters.

Rapier

Twin Zenith WIA 36 downdraught carburettors connected to a single oil bath air cleaner by a common air box.

WIP carburettors have the by-pass fuel supply system blanked off. WIA carburettors have a by-pass jet supplied through a by-pass valve which is controlled by a diaphragm and spring operated by inlet manifold depression.

36 denotes that the throttle bore size is 36 mm. and WI the carburettor type.

Both these carburettors have a modified accelerator pump operating mechanism which gives a more rapid action of the accelerator pump during early stages of throttle opening.

Jet sizes, orifice hole sizes and setting dimensions are given in the Data Section at the front of this manual.

By removing six cheese-headed screws, the top body of the carburettor can be removed, allowing easy access to the following items: float and float needle and seat, slow running jet, the combined by-pass valve and jet, the accelerator pump and its check valve, discharge nozzle, and delivery ball valve.

The main jet can be removed by using a spanner on its external hexagon head which is situated on the underside of the float chamber.

The three main components of the carburettor, the various passage-ways, jets, valves and mechanical linkage are shown in Figs. 5 and 6, An exploded view of the carburettor is given in Fig. 18 and the names of the various parts on the adjoining page.

A heat insulating joint of 5 mm. thickness is used between the throttle spindle body and the main body, to reduce heat flow from the manifold to float chamber and jets. This arrangement has the advantage of keeping the throttle warm which prevents icing up in cold damp weather. Four $\frac{1}{4}''$ B.S.F. recessed cheese-headed screws are used to hold these parts together.

Under extremely hot operating conditions fuel will sometimes boil in the carburettor after the engine has been stopped. To deal with this the main discharge jet drillings and high speed bleed are arranged to act as an anti-percolating device keeping the boiling fuel bubbles inside the carburettor.

CARBURETTOR OPERATION

The carburettor has to supply a correct fuel/air mixture to meet the following operating conditions.

1. Good starting from cold.
2. Slow running or fast idling.
3. Cruising (part throttle running).
4. Acceleration without flat spots.
5. Full power (full throttle) requirements.

The way in which these requirements are met by the various parts of the carburettor are fully described and illustrated in the following pages.

Float Chamber (See Fig. 7)

Petrol enters the carburettor through the inlet at the base of the float chamber, and then passes through the float needle seating. The needle is attached to the cylindrical float by means of a wire clip. As petrol is admitted, the float rises and pushes the needle down to its seat, thus cutting off the flow when the correct level is reached in the float chamber. This action is entirely automatic and continues all the time the carburettor is being fed with fuel.

From the float chamber fuel passes to the main jet, accelerator pump suction valve, and to the by-pass

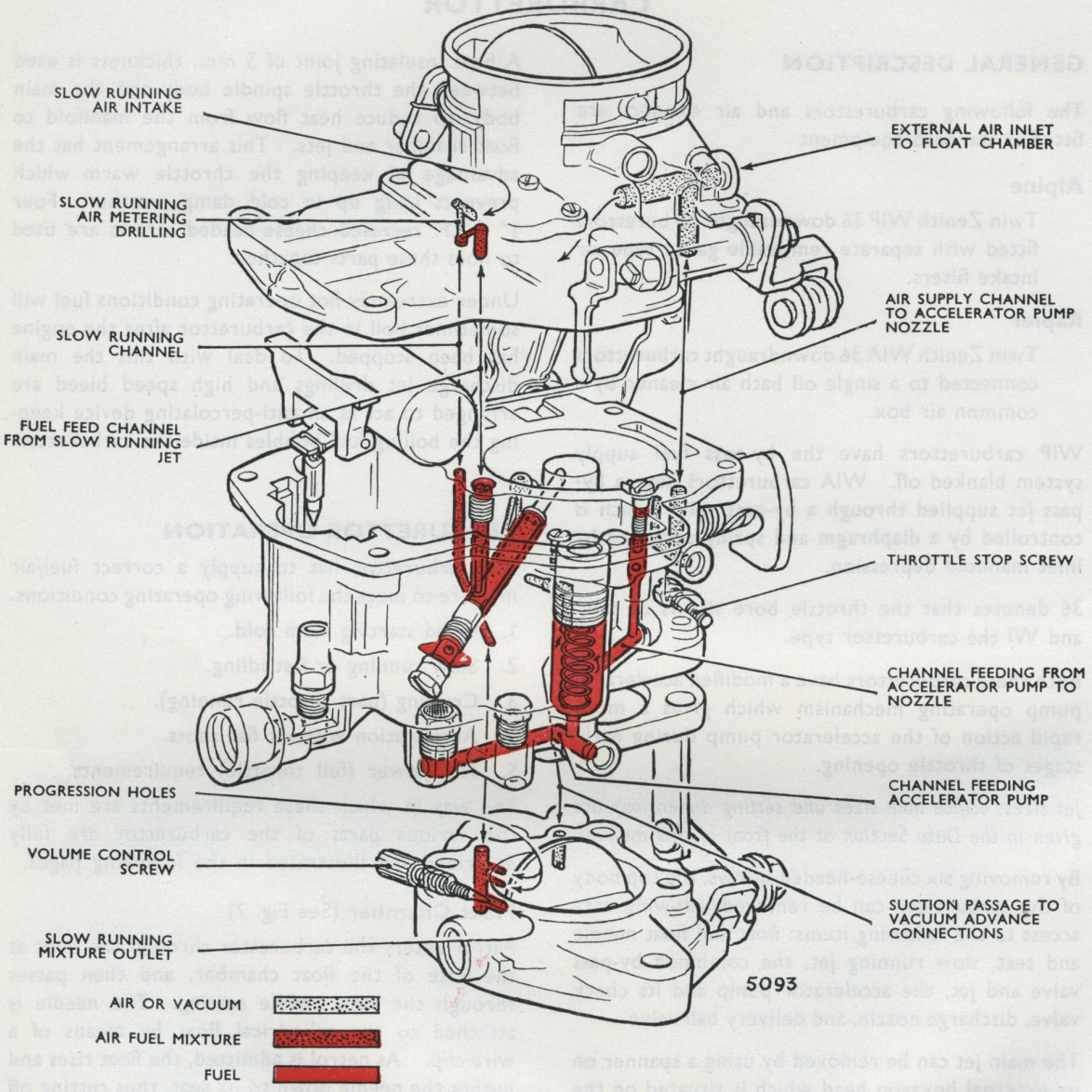

Fig. 5. *Zenith WIP 36 carburettor. Arrangement of channels*

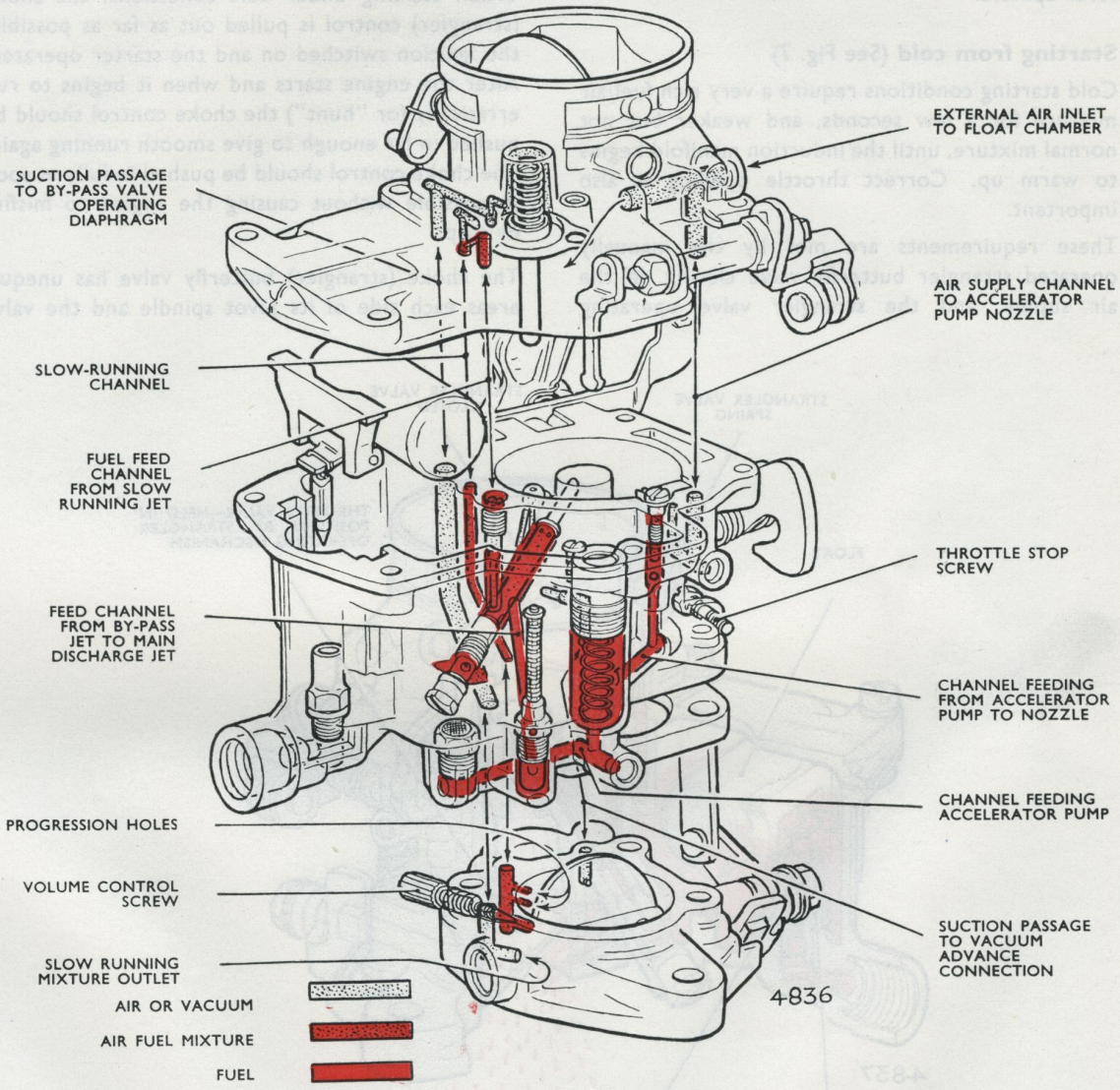

Fig. 6. *Zenith WIA 36 carburettor. Arrangement of channels*

valve. The latter is only used on WIA carburettors.

The float chamber is vented to atmosphere by a hole entering adjacent to the accelerator pump lever spindle.

Starting from cold (See Fig. 7)

Cold starting conditions require a very rich fuel/air mixture for a few seconds, and weaker but not normal mixture, until the induction manifold begins to warm up. Correct throttle opening is also important.

These requirements are met by the manually operated strangler butterfly valve closing off the air supply, and the strangler valve operating mechanism opening the throttle to the correct starting position, when the choke control is pulled out to start the engine.

When starting under cold conditions, the choke (strangler) control is pulled out as far as possible, the ignition switched on and the starter operated. After the engine starts and when it begins to run erratically (or "hunt") the choke control should be pushed in far enough to give smooth running again. The choke control should be pushed in fully as soon as possible without causing the engine to misfire or stop.

The choke (strangler) butterfly valve has unequal areas each side of its pivot spindle and the valve

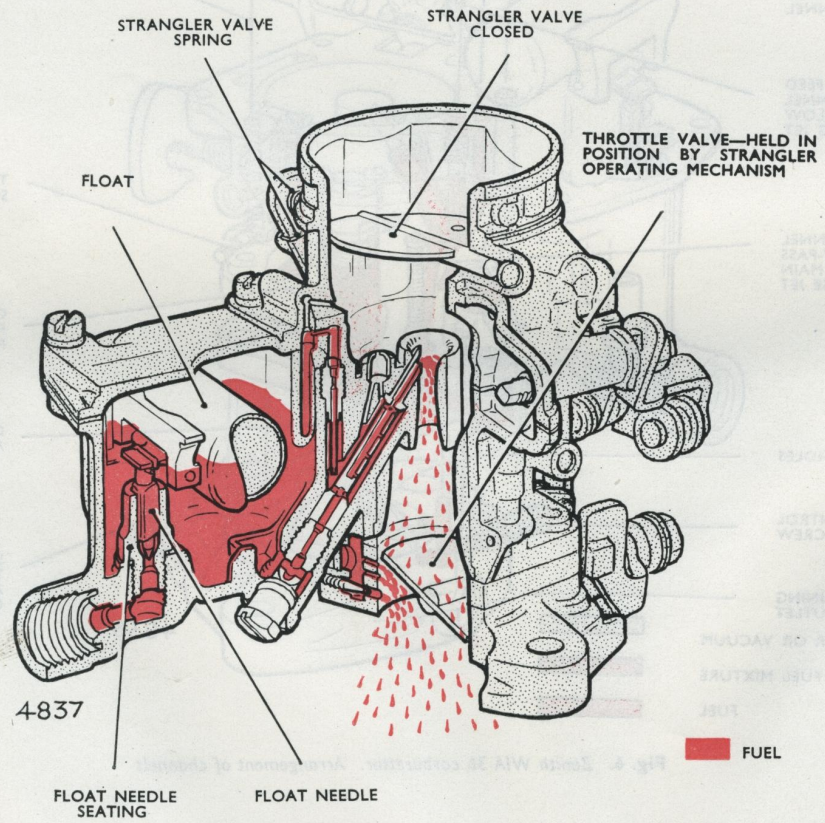

Fig. 7. *Cold starting operation*

can open against a light spring, even when the choke control is still pulled out.

When the engine starts, with the choke valve closed, air pressure acts on the larger pivoted area of the choke butterfly valve, opening it a small amount against its light control spring and the lower pressure in the carburettor intake.

This allows entry of sufficient air to prevent over-choking of the engine when starting from cold.

The carburettor strangler mechanism and various positions taken by the cam lever are shown in Fig. 8 and the carburettor action when starting, in Fig. 7.

Slow running (See Fig. 9)

With the throttle in the idling position, the mixture is supplied by the idle jet which draws fuel through the crossholes at the lower end of the main discharge jet. This fuel, which is metered by the small calibrated hole in the bottom of the idle tube, is partly emulsified by air drawn from the air intake through the air bleed hole and the mixture then passes along an internal channel to the idling orifice.

Idling is adjusted by means of the throttle stop screw and the volume control screw (See Fig. 9). If screwed in, the throttle screw will open the throttle

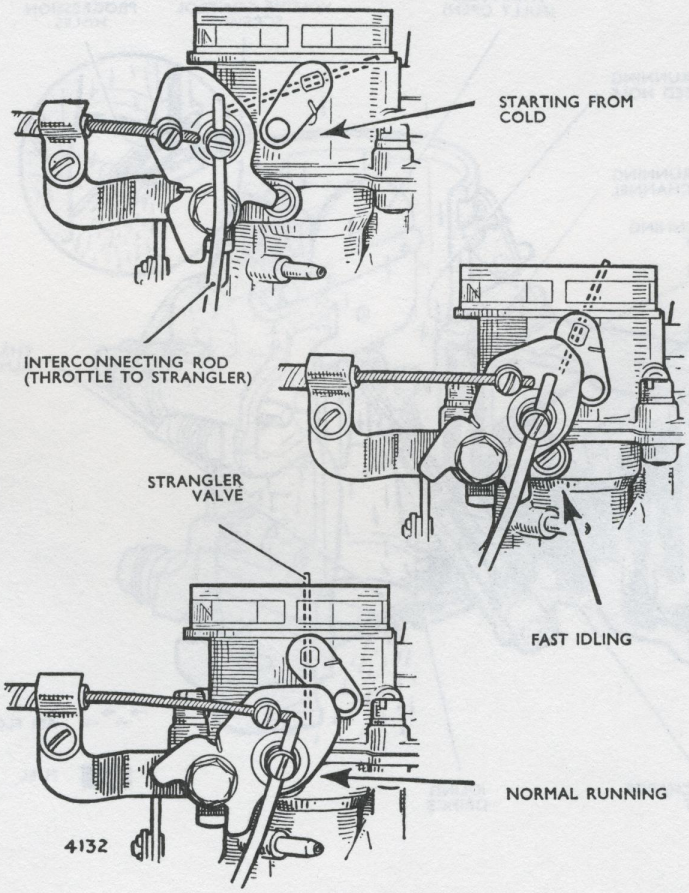

Fig. 8. *Strangler cam positions*

wider and increase the engine speed and when unscrewed the speed will be reduced.

The strength of the idling mixture is established by the size of the idle jet and that of the air bleed. The jet size is variable, but the air bleed is drilled in the carburettor casting and is not intended to be altered.

The volume control screw which has a tapered tip, and is on the engine side of the throttle, controls THE AMOUNT of idle mixture passed to the engine. To weaken the mixture, the screw should be turned clockwise; conversely it must be unscrewed to make the mixture richer.

The two small holes at the throttle edge break into the idle channel. These assist in the transfer from the idle system to the main metering system as the throttle is opened, and provide a smooth and progressive action during that period; they are known as "progression holes", and are not adjustable. It is important that they are not tampered

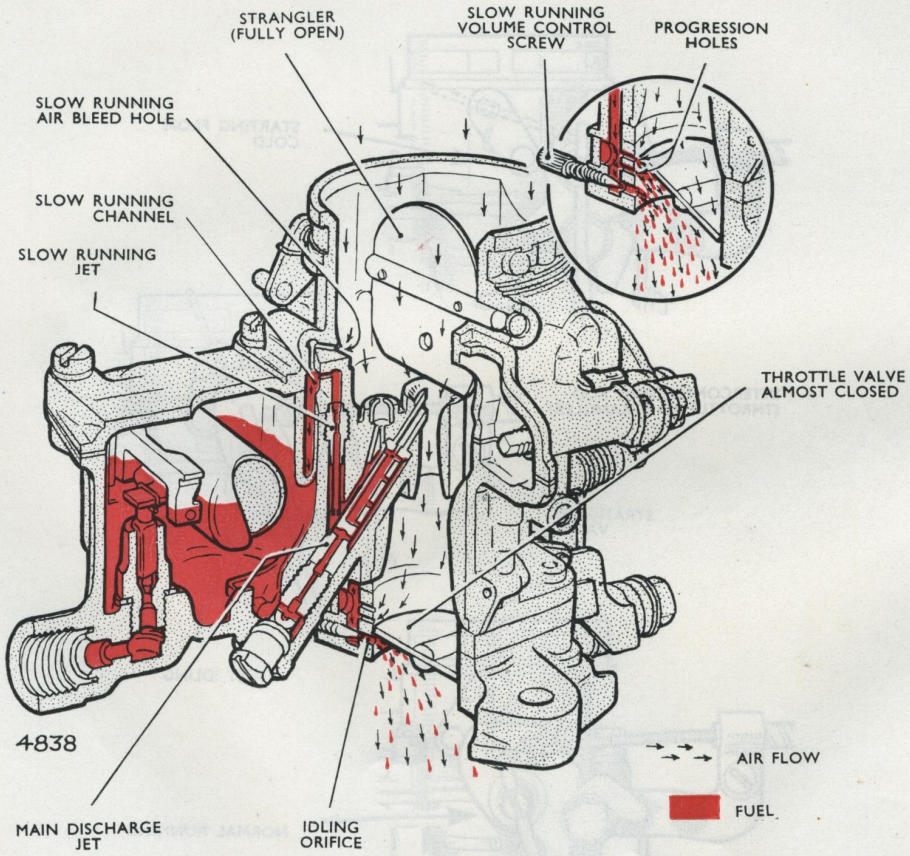

Fig. 9. *Idling operation conditions*

with. Fig. 9 illustrates carburettor action under idling conditions, and the inset, the progression holes which operate on fast idling.

Part and full throttle operation (See Fig. 10)
As the throttle is opened beyond the slow running position, the main carburettor comes into action and suction at the small venturi draws fuel from the main discharge jet.
When the fuel level falls in the main discharge jet a series of holes which are in communication with the atmosphere through the high speed bleed are uncovered. The fuel issuing from the main jet is consequently partly atomised by air entering these holes and is completely broken up when entering the small venturi. It then passes through the large venturi to the induction system.
On the WIP carburettor the discharge characteristic of the main discharge jet is such that a correct mixture is given over the light throttle to full throttle range.
On the WIA carburettor part throttle operation is similar to the WIP carburettor, but at wider throttle openings fuel is supplied by a by-pass jet as well as by the metering jet, as described in the following paragraphs.

Some carburettors are fitted with an accelerator pump nozzle with a sloping end as shown in inset 'A' of Fig. 13. This type of nozzle allows fuel to be drawn from it when the air volocity, past its sloping end, is high enough to create the depression required

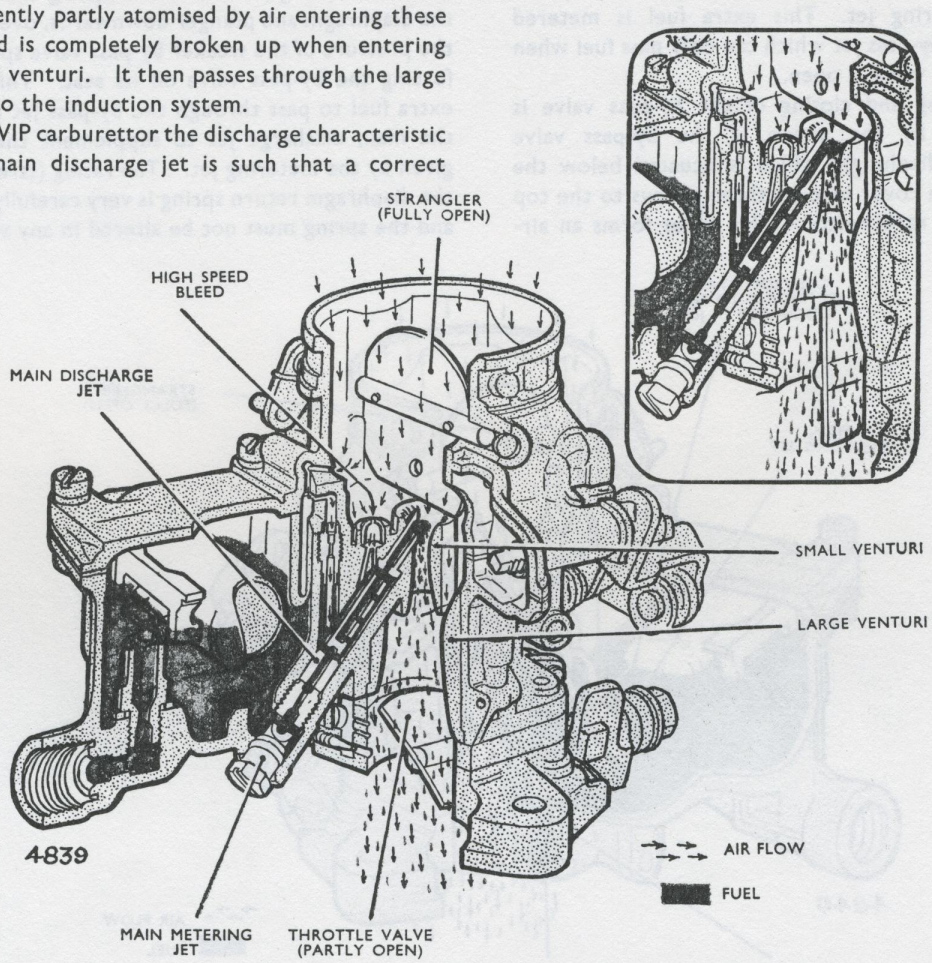

Fig. 10. *Part throttle (cruising) operating condition. Full throttle operating condition shown in inset above*

to cause a fuel discharge. This fuel supplements that already metered by the main jet, and by-pass jet on WIA carburettors. It is metered by a drilling in the nozzle and is only supplied to the air stream under wide throttle driving conditions.

The by-pass jet (See Figs. 11 and 12)
WIA Carburettors only

In this carburettor the main jet supplies the correct amount of fuel necessary for normal cruising speeds at part throttle. For maximum power at all speeds more fuel is required than that provided by the main metering jet. This extra fuel is metered through a by-pass jet which can only pass fuel when the by-pass valve is open.

The opening and closing of the by-pass valve is controlled by the action of the by-pass valve operating diaphragm which is situated below the bottom of a cover held by three screws to the top part of the carburettor. This cover forms an air-tight compartment that is connected by a passage-way to the engine side of the throttle valve (see Figs. 6 and 12).

At all light running and at cruising speed the inlet manifold depression is high and suction lifts the diaphragm and its plunger extension against its return spring and the by-pass valve remains closed.

At about three-quarters throttle opening the engine suction in the inlet manifold becomes insufficient to hold the diaphragm and its plunger up against its return spring pressure. The spring then pushes the diaphragm and plunger downwards, overcoming the pressure of the weaker by-pass valve spring and forcing the by-pass valve off its seat. This allows extra fuel to pass through the by-pass jet and into the main discharge jet to supplement the supply given by the metering jet. The rating (strength) of the diaphragm return spring is very carefully chosen and the spring must not be altered in any way.

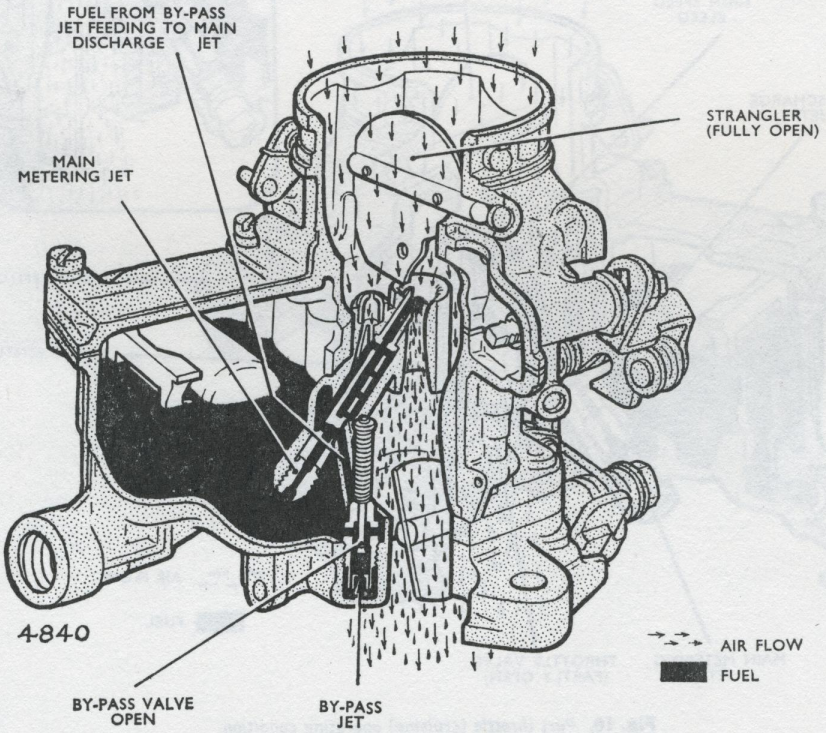

Fig. 11. *By-pass jet in operation—WIA carburettors only*

At about three-quarters throttle opening the engine suction in the inlet manifold becomes insufficient to hold the diaphragm and its plunger up against its return spring pressure. The spring then pushes the diaphragm and plunger downwards, overcoming the pressure of the weaker by-pass valve spring and forcing the by-pass valve off its seat. This allows extra fuel to pass through the by-pass jet and into the main discharge jet to supplement the supply given by the metering jet. The rating (strength) of the diaphragm return spring is very carefully chosen and the spring must not be altered in any way.

The accelerator pump (See Figs. 12 and 13)

To ensure immediate acceleration when the throttle is suddenly opened, a controlled and metered supply of fuel is required. This is provided by the accelerator pump, the object of which is to overcome any tendency for a lag in acceleration when the carburettor is adjusted to give a low consumption at normal road speeds. It is directly connected to the throttle spindle by suitable linkage, so that every time the throttle is snapped open a small quantity of metered fuel is injected into the air stream.

When the pump piston is at the top of its stroke,

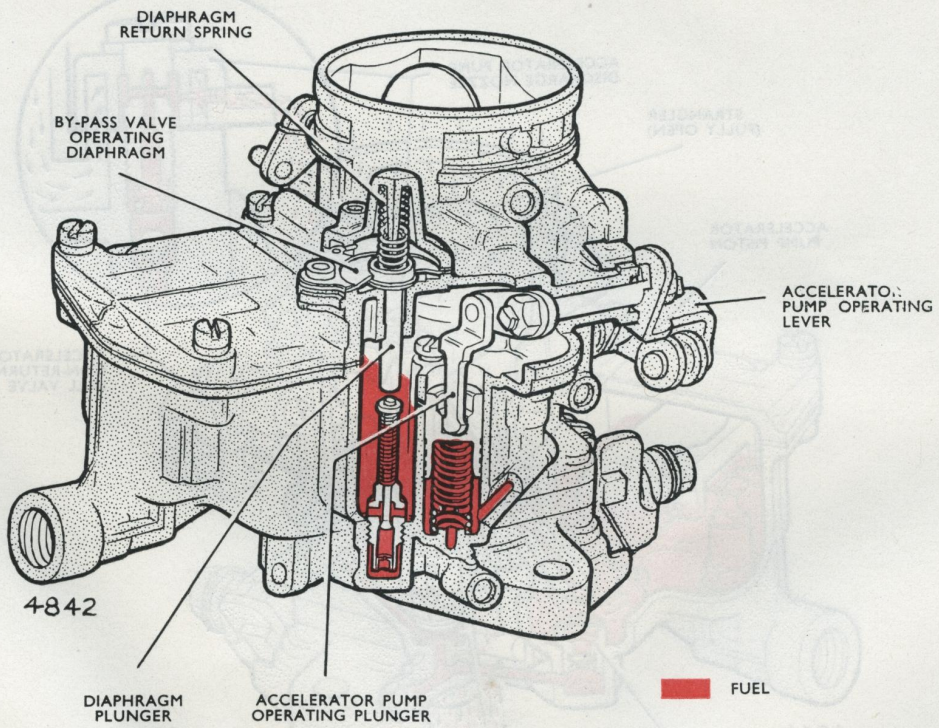

Fig. 12. *By-pass valve and accelerator pump operating mechanism*

the cylinder is charged with petrol admitted from the floatchamber through the non-return valve. The piston is spring-loaded, and is retained in its cylinder by a shouldered screw. When the throttle is opened, the piston is forced down by the pump linkage, discharging a stream of petrol via an internal passage through the non-return pump discharge ball valve and pump discharge nozzle into the air stream.

The pump discharge nozzle consists of a small die casting shown in section in the inset of Fig. 13. Fuel is fed into the nozzle centre and discharged under the pressure exerted by the fuel pump through a small calibrated hole into a space in the nozzle. This space is in communication with the float chamber air vent hole leading to the outside of the carburettor. From this space the fuel enters the main air stream by a larger hole in an emulsified state.

If the pump discharge ball valve is not seating properly, this arrangement assists in preventing a continuous fuel discharge from the nozzle by relieving it of the depression in the area of the venturi.

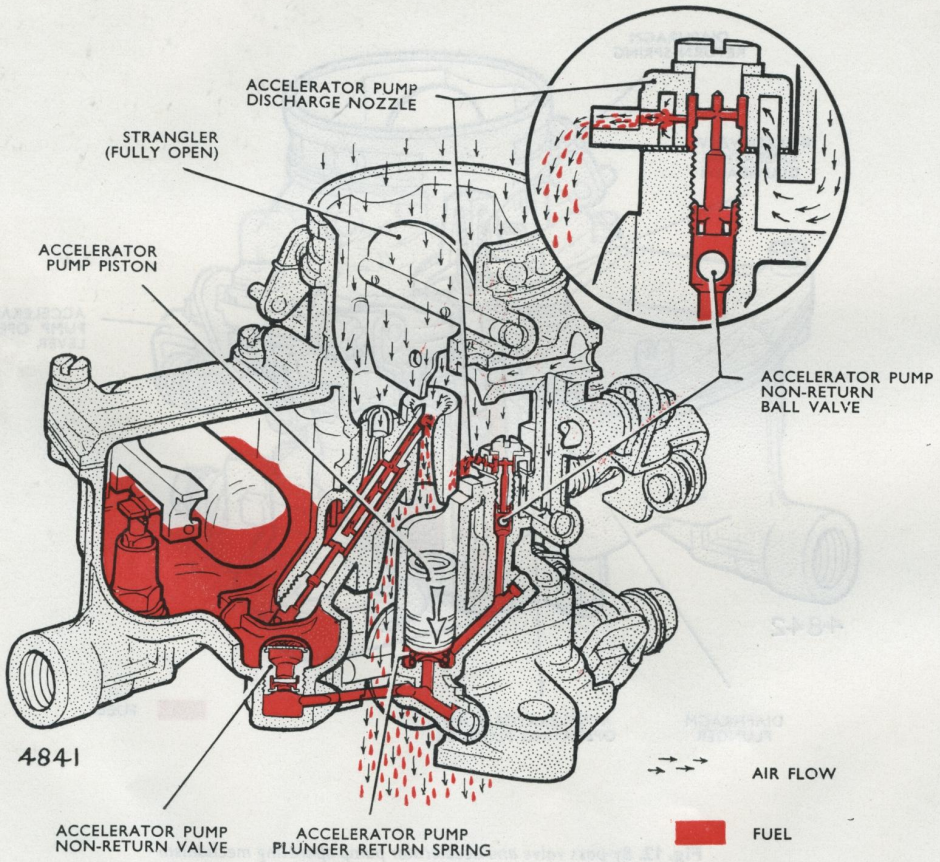

Fig. 13. *Accelerator pump operating*

The accelerator pump stroke takes place over the throttle opening range shown in illustrations A and B.

Over the latter part of the throttle opening shown in B and C, no accelerator pump action takes place.

Movement of the accelerator pump operating arm into the hole 'L', shown in the inset, increases the accelerator pump stroke.

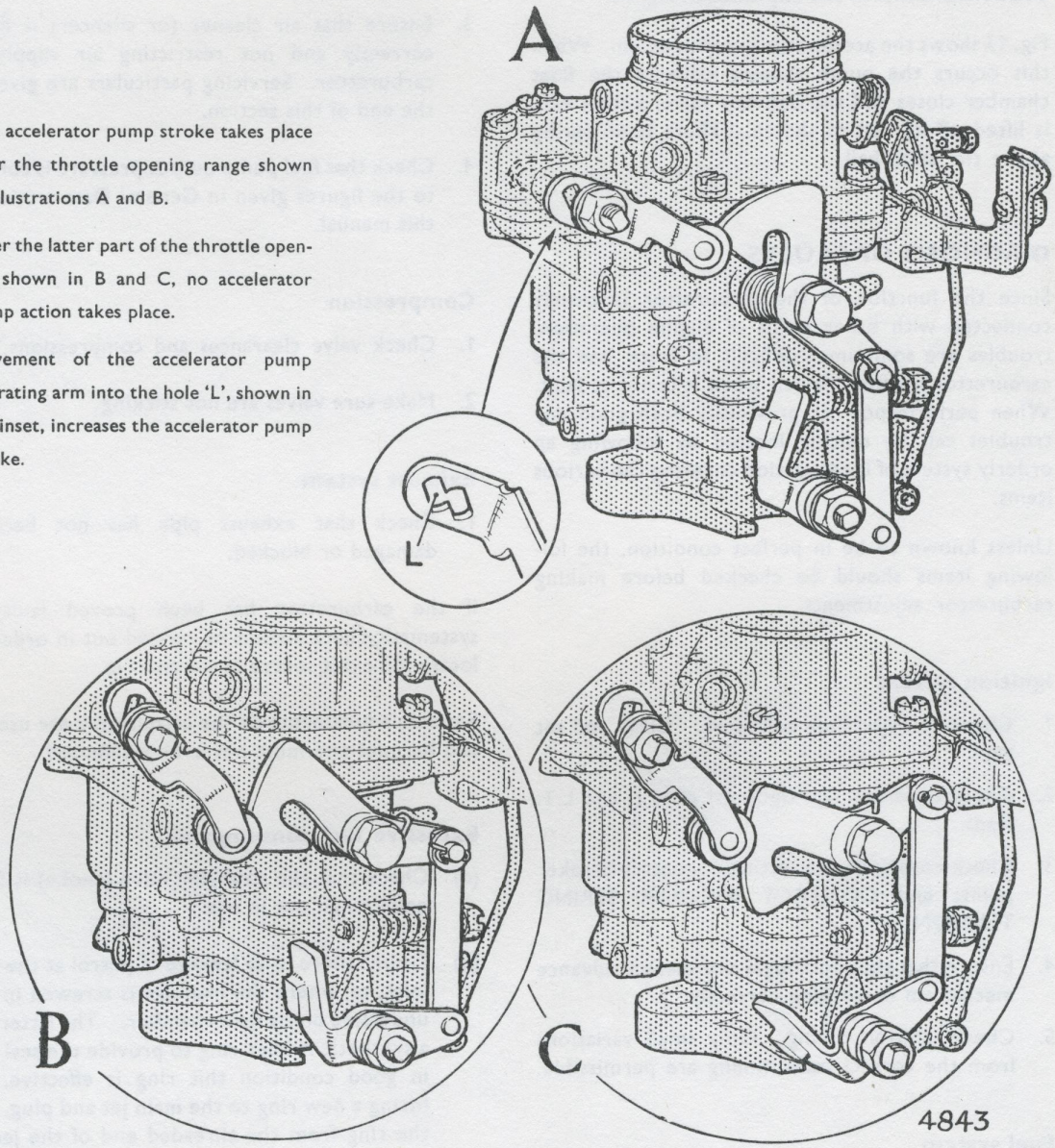

Fig. 14. *Accelerator pump operating linkage*

Provision is made for varying the pump travel, and long or short strokes may be arranged. These positions are shown and explained in Fig. 14.

Fig. 13 shows the accelerator pump in action. When this occurs the pump suction valve in the float chamber closes and the delivery valve, a steel ball, is lifted off its seat as shown. There is no spring above the steel ball.

DIAGNOSIS OF FAULTS

Since the function of the carburettor is closely connected with other items of engine operation, troubles are sometimes difficult to trace and the carburettor is often blamed when it is not at fault. When performance has previously been good any troubles can be quickly located by following an orderly system of investigation covering the various items.

Unless known to be in perfect condition, the following items should be checked before making carburettor adjustments.

Ignition system

1. Check sparking plug condition. Clean and set gaps.
2. Check condition and tightness of H.T. and L.T. leads.
3. Check condition and setting of contact breaker points and CONTACT BREAKER SPRING TENSION.
4. Ensure that the centrifugal and vacuum advance mechanism is working correctly.
5. Check ignition timing. Only small variations from the correct static timing are permissible.

Fuel system

6. Ensure that an adequate fuel supply is being delivered to float chamber.
2. Examine induction manifold and carburettor flange for air leaks.
3. Ensure that air cleaner (or silencer) is fitted correctly and not restricting air supply to carburettor. Servicing particulars are given at the end of this section.
4. Check that fuel pump output pressure is correct to the figures given in General Data section of this manual.

Compression

1. Check valve clearances and compressions.
2. Make sure valves are not sticking.

Exhaust system

1. Check that exhaust pipe has not become damaged or blocked.

If the carburettor has been proved faulty a systematic check should be carried out in order to locate the exact source of the trouble.

Random adjustments on the carburettor are useless and harmful and must never be attempted.

Excessive fuel consumption

(*a*) Check that the strangler valve (choke) is fully open when not in use.

(*b*) Ensure there is no leakage of petrol at the fuel inlet, or where the main jet is screwed in the underside of the float chamber. The latter has a synthetic rubber ring to provide the seal and in good condition this ring is effective. In fitting a new ring to the main jet and plug, roll the ring from the threaded end of the jet to ensure it is not damaged in the fitting, and see that it is seating in the recess machined in the body of the plug portion of the jet.

(c) Check that main metering jet is as specified and that it is properly tightened.

(d) On WIA carburettors check that by-pass valve is not sticking or leaking. If this occurs too much fuel will be fed to the main discharge jet under part throttle conditions. The valve assembly must be removed and any foreign matter removed by blowing through the valve orifice.

(e) Check that the gaskets between the carburettor bodies and both sides of the by-pass valve operating diaphragm on WIA carburettors are not allowing air leakage. The condition of the diaphragm should also be checked.

If air leaks exist the diaphragm return spring can open the by-pass valve too early which will allow too much fuel to be supplied under cruising (part throttle) conditions.

(f) Check that the ball beneath the screw securing the pump discharge nozzle is in position. See Fig. 13. It can easily be lost in dismantling the carburettor if the body is inverted after removal of the screw securing the pump discharge nozzle, or if the accelerator pump is operated with the screw removed.

If the carburettor has been assembled without this ball or if there is dirt under the ball or the ball seating faulty, the manifold depression may at certain speeds draw fuel from the pump nozzle. This will, of course, increase the fuel consumption.

With the air intake elbow removed it is possible to see the pump discharge nozzle and if the engine is run at a high speed no fuel should come from the nozzle after completion of the accelerator pump stroke.

(g) Check that the fuel level in the float chamber is correct.

Insufficient top speed

(a) See that throttle valve is opening fully over the range provided by the particular carburettor stop plate arrangement.

(b) Check the fuel supply to the float chamber. Fuel pump output pressure should be checked. A condition can arise when, due to worn fuel pump linkage or improperly fitted pump, the pump output is too low under full throttle conditions.

(c) On WIA carburettors see that the by-pass jet is clear and of the specified size. To do this the by-pass valve must be removed from the float chamber, but no attempt must be made to remove the jet orifice cup from the valve body. The jet number is stamped on the hexagon of the body.

Bad slow running

(a) Check the synchronisation of the throttles and reset the slow running volume control screws as described later in this section under ADJUSTMENTS. If slow running cannot be correctly set check each carburettor for the following possible causes.

(b) Check that the idle jet is clear.

(c) Blow through the slow running system passages with clean compressed air.

(d) Ensure that the joint fitted between the top part of the carburettor and the float chamber is correctly fitted. Air must not leak into the slow running system passageways.

(e) Make certain that the screws securing the throttle barrel to the main body of the carburettor are tight, and that the hole is clear which carries the mixture through the main body, heat insulator, and throttle body. A

little jointing compound should be used between insulator faces and body faces.

(*f*) Remove the slow running volume control screw and see that its tapered end is in good condition. If worn, it should be changed. The spring under the screw head must be long enough to prevent the screw from vibrating from its set position.

(*g*) Check that the throttle spindle is not badly worn. Wear at this point allows an excessive amount of air to enter the carburettor under slow running conditions.

Poor performance at small throttle opening

(*a*) Adjust the idling speed to give smooth running, just off rich or "hunting" condition at 600 r.p.m. With twin carburettors a flat spot or deadness at low speeds is generally caused by the carburettors not being properly synchronised.

(*b*) If the flat spot is still evident, check that the idle and progression holes are clear.

(*c*) Check that the idle jet is clear.

(*d*) Check float chamber fuel levels.

Poor acceleration

(*a*) Make certain the calibrated orifice in the pump discharge nozzle and the drillings in the screw securing the nozzle through which the petrol must pass on its way to the pump nozzle are clear. See inset Fig. 13.

(*b*) Check that the pump piston works freely and is not stuck down. Provided the pump cylinder is clean, the spring beneath the piston will ensure the return of the piston.

(*c*) See that the non-return (suction) valve to the pump cylinder is clean and will close effectively, and that the assembly is screwed tightly into the base of the float chamber.

(*d*) Two settings are available for the pump stroke by using one of the two holes in the pump outside operating lever. The lever is normally set in the hole which gives a short pump stroke. The hole 'L' is used to give a long pump stroke, See Fig. 14. This hole provides the means required to vary the quantity of fuel delivered by the accelerator pump. If the pump link is in the short position, try the linkage in the hole giving maximum length of piston travel.

(e) *WIA Carburettors only*

Remove the by-pass diaphragm cover and check that the stem on the insert fitted in the centre of the diaphragm will move freely. On snap opening of the throttle, the lower depression in the manifold will permit the spring above the diaphragm to force this stem down and open the by-pass valve to provide additional fuel apart from that coming from the metering jet and from the pump nozzle. Therefore, any obstruction in the by-pass jet or incorrect operation of the by-pass valve will affect acceleration.

(*f*) Flat spots or hesitation on slow progressive throttle opening can be caused by incorrect adjustment of the slow-running mixture or by the progression hole or holes in the throttle barrel being partially obstructed.

Difficult starting from cold

Ensure there is petrol in the float chamber, and that it is replenished by fresh petrol from the fuel pump within a few seconds of rotating the engine by the starter. A clip fixing the needle to the float arm ensures that the needle is lifted from the seating, eliminating any question of the needle

sticking in the closed position, due to formation of gummy deposit from petrol or additives.

See that both strangler flaps in the air intakes close completely when the choke (strangler) control is operated. From examination of the strangler control on the carburettor it will be seen that there is no mechanical connection between the choke cable and the spindle on which the strangler flap is fitted. Movement of a cam lever on the side of the air intake permits the spring loading of the strangler spindle arm to close the flap in the air intake. Therfore, undue friction by reason of bent strangler spindle, binding bearings or a broken spring could explain non-closure of the flap in the intake. Removal of the air cleaner connection will enable this to be checked, or alternatively the strangler valve movement can be checked by pulling the choke control fully out and operating the strangler spindle lever by hand. The correct position for the strangler spindle lever, when the choke is pulled fully out, is shown in Fig. 8.

Check that the throttle opens when the strangler valve is fully closed. This amount of throttle opening is very important and must agree with the measurement given in the Data Section under Carburettor, Fast idle. The correct method of making this adjustment is given under ADJUSTMENTS.

The choke control should not move back after being pulled out. When correctly fitted the choke control should hold the strangler valves closed when it is pulled fully out, and released. It should also enable a fast idle speed to be held when moved out a short distance and released. If the choke control cable is too free in operation, so that it falls or creeps back when released, it can be stiffened up by slightly bending the inner cable to give more internal stiffness.

Difficult starting when hot

This is caused by a rich mixture produced by flooding of the carburettor or incorrect use of the strangler. Any fuel that runs into the inlet manifold should drain away through the inlet manifold drain pipe and a check should be made to see that this pipe and its ball valve end are clear.

Provided the carburettor is not constantly flooding, the engine can usually be started after gently opening the throttle to its fully open position and rotating the engine on the starter with the ignition switched on.

ADJUSTMENTS

The only adjustments that may need attention in service are:—

(*a*) Synchronisation of throttles and slow running adjustment.

(*b*) Throttle, fast idling for starting.

(*c*) Accelerator pump stroke.

(*d*) Fuel level.

(*e*) Choke control.

Synchronisation of throttles and slow running adjustment (See Fig. 15)

Correct idling of the engine, and proper performance at small throttle openings are ensured by synchronisation of the two carburettors. These adjustments are made in the following order but it is emphasised that correct adjustment cannot be made if air leaks exist in the induction system or if the ignition is incorrectly timed, or not functioning properly.

1. Loosen the clamp bolt (3) to allow independent movement of each throttle.
2. Unscrew throttle stop screws (2) until both throttles are in the fully closed condition, and the screw ends clear of their abutments.
3. Holding the throttles in the shut position tighten the coupling clamp bolt (3).

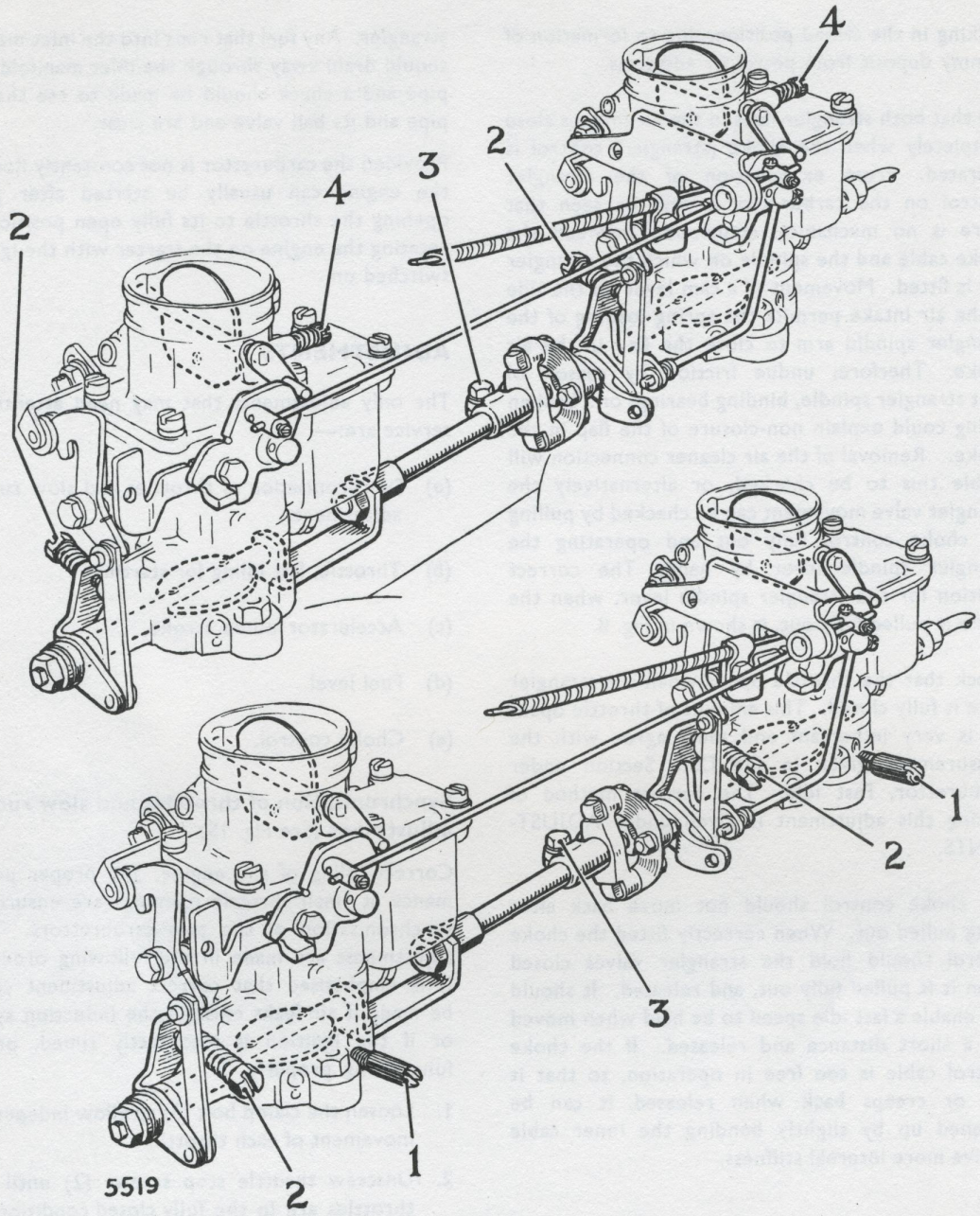

1. Volume control screw. *(not fitted if item 4 is used)*
2. Slow running speed adjustment screw.
3. Coupling yoke clamp bolt.
4. Slow running air adjustment screw. *(not fitted if item 1 is used)*

Fig. 15. *Synchronisation of throttles and slow running adjustment*

4. Screw in front carburettor throttle stop screw (2) until it just touches its abutment as the throttles are held closed; then screw in a further 1½ turns in a clockwise direction.

5. Screw in the volume control screw (1) or the slow running air control screws (4) by hand. A screwdriver must not be used as it would damage the screw seatings. Screw back screw (1) three-quarters of a turn or screw (4) one and a quarter turns in an anti-clockwise direction.

6. With the engine warmed up to its normal operating temperature adjust the control screws (1) or (4) on the front carburettor to give the smoothest possible idling. Then adjust the rear carburettor in a similar manner. Re-adjust front carburettor if necessary. Rotation of screw (1) in a clockwise direction weakens, and anti-clockwise rotation enrichens the slow running mixture. Rotation for the screw (4) is exactly opposite.

7. If idling speed is now incorrect, increase or decrease speed as required by adjustment of the front throttle stop screw (2). This correction of idling speed may require slight re-adjustment of the screws (1) or (4).

   Idling speed must always be adjusted by the throttle stop screw (2) and idling mixture by the screws (1) or (4).

8. The correct slow running speed for a HOT engine is 750 to 850 r.p.m. with the slow running mixture set just off of the rich ("hunting") condition.

   When the slow running is correct, adjust the rear carburettor slow running throttle stop screw (2) until it just touches its abutment. This must be very carefully carried out. The screw must actually touch the abutment but not so hard as to increase the slow running speed.

   A final check of the slow running should be made after replacing the air cleaners.

9. After the slow running is correct a check must be made to ensure that under full throttle conditions the rear carburettor does not reach its full throttle stop, before the front carburettor. If this occurs undue strain will be placed on the throttle coupling which can upset throttle synchronisation. The full throttle stops on the rear carburettor can be filed if necessary.

10. If "hesitancy" occurs when accelerating under traffic driving conditions, it is an indication that the carburettors are not properly synchronised. Synchronisation can be checked by holding a suitable length of carboard tubing over each carburettor intake, after removing the air cleaners and listening for the "progression hiss" as the engine speed is increased from idling to about 1,000 r.p.m. Both carburettors should make the same sound which is quite distinct to hear.

    If necessary the clamping bolt (3) can be loosened off and the throttles adjusted to obtain this condition.

    After retightening the clamping bolt (3) it is important to ensure that both throttle screws (2) come against their abutment when the engine is idling.

11. A very useful and inexpensive gauge known as the "Synchro-Test" can be used to balance the carburettors. This gauge saves a lot of time and may be obtained under reference number B.91 from:—

    Crypton Equipment Limited,
    Bridgwater, Somerset, England.

    Full operating instructions are supplied with each gauge.

Throttle, fast idle for starting (See Fig. 16)

This adjustment ensures that the throttle is open to the best position for cold starting when the strangler is fully closed and can only be made with carburettor removed from the engine.

To make this adjustment slacken the set screw on the fast idle rod connection on the strangler-

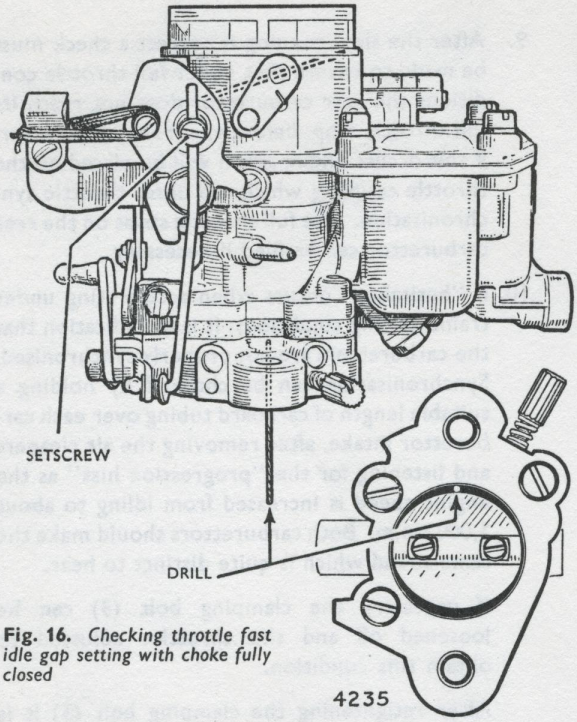

Fig. 16. *Checking throttle fast idle gap setting with choke fully closed*

operating cam. Tie this cam in its full over starting position. Insert a No. 70 drill shank, or a wire ·028 ins. (0·7mm) dia, between the throttle and the carburettor body in line with carburettor fixing bolt holes as shown in Fig. 16 inset. Tighten the adjustment set screw.

Release strangler-operating cam.

Again pull strangler cam to its full over position and check that throttle valve is open to the drill diameter dimension.

Accelerator pump stroke (See Fig. 14)

Two holes are provided at the fulcrum shaft end of the outside cranked operating arm of the accelerator pump. This arm is normally fitted with the fulcrum shaft in the nearest hole to the arm crank. In this position the short pump stroke is given. The long pump stroke is obtained by fitting the fulcrum shaft in the hole 'L', farthest from the arm crank. See Fig. 14.

Fuel level

This adjustment is rarely needed. The correct fuel level is 19 mm. below the float chamber top face when the carburettors are supplied with a head of fuel giving a similar pressure to that of the correct fuel pump output pressure.

The fuel levels must be similar and can be checked with both carburettors in position in the following manner:—

1. Disconnect the fuel pump delivery pipe and connect a reliable pressure gauge or mercury manometer to this point.
2. Fit up a small tank of fuel (a quart oil tin) to feed fuel to both carburettors through a rubber tube. This tube should be connected to the fuel pipe at the end previously removed from the fuel pump delivery union.
3. Run the engine at a fast idle speed on the fuel in the small tank and note the fuel pump output pressure. This should be 1½-2½ P.S.I. (·11-·18 kg. sq. cm.) and if the pump output is outside these limits it should be corrected by adding or removing packings between the fuel pump and cylinder block.
4. Remove both carburettor tops and hold float fulcrum blocks in position by means of two carburettor top cover screws and washers.
5. Support the fuel tank at a height above the carburettor float chamber top face that will give the same pressure as that obtained when the fuel pump pressure was checked.

   The approximate heights for the following pressures are:—

   1½ P.S.I. (·11 kg. sq. cm.) 5 feet (1·5 metres)
   2 ,, (·14 ,,) 6½ ,, (1·9 ,,)
   2½ ,, (·18 ,,) 8 ,, (2·4 ,,)

   A tank height of 6½ ft. ABOVE THE CARBURETTOR FLOAT CHAMBER TOP EDGE is usually sufficiently accurate as a slight difference in fuel pressure only makes a small alteration of fuel level.
6. Remove fuel from both carburettor float chambers and turn on fuel from tank. The fuel should then come to the correct level from the float chamber top edge.

   Alteration to the fuel level, if required, is made by adding or taking aluminium washers from under the float valve seat.

Choke control—To adjust (See Fig. 15)

1. Slacken the two set screws holding the choke operating cable and the choke interconnecting rod to the spindle (1) shown in Fig. 15.

2. Close choke valves and tighten the set screw to secure the connecting rod in the spindle of the front carburettor strangler cam. Also check the tightness of set screw securing the connecting rod at its rear end. Recheck that both choke valves close TOGETHER when the connecting rod is moved as far back as possible.

3. Check that choke control outer cable is properly clamped at its fixing point on the front carburettor.

4. Pull choke control knob out about $\frac{1}{8}''$ (3 mm.) and tighten the inner cable by its securing set screw in the spindle (1), Fig. 15, on the front carburettor. This will ensure that the choke control cams will be pushed back against their stops when the choke control is pushed in.

5. Pull choke control out and check that both choke valves are fully closed and remain closed when the control knob is released. If there is insufficient internal friction in the control cable to keep the choke from moving when the choke control knob is released at the full out position, the internal cable should be removed and bent so as to give more stiffness in operation.

DISMANTLING FOR CLEANING
(See Figs. 17 and 18)

Before a carburettor is dismantled it should be thoroughly cleaned externally.

1. Remove split pin, washer and pin from connecting link at its connection on the accelerator pump operating cam.

2. Remove six cheese-headed screws holding top of carburettor to carburettor body.

3. Lift out float. The float needle is attached to the float by a clip.

4. Remove four cheese-headed screws holding throttle body to carburettor body, and lift out venturi after removing its locating screw.

5. Remove metering jet, which also holds the main discharge jet in position. This jet is a push fit into the carburettor body and may be extracted by pulling on a suitable taper tap screwed into the exposed uncalibrated end of the jet. Sometimes these jets are a loose fit and fall out the exposed uncalibrated end of the jet. Some-after removing the metering jet. Great care is needed to ensure that they are replaced as illustrated in Fig. 10. It is not necessary to remove the main discharge jet when cleaning the carburettor as it can be blown through with compressed air.

6. Remove slow running jet.

7. Remove accelerator pump suction (intake) valve. This has a fine gauze cover.

8. On WIA carburettors remove by-pass valve. The by-pass jet is fitted into the bottom of the by-pass valve body and the jet itself must not be removed.

9. Remove shouldered cheese-headed screw keeping the accelerator pump piston in its cylinder barrel which is bored in the carburettor body. Lift out brass piston and its return spring. There is no valve at the bottom of the pump cylinder.

10. Keeping the carburettor in a vertical position remove the cheese-headed screw securing the accelerator pump discharge nozzle. Remove nozzle and its paper joint and note that a small steel ball without spring is fitted below the nozzle-securing screw. This ball is the accelerator pump delivery valve. Turn the carburettor upside down over a small box to catch the small steel ball.

11. On WIA carburettors remove three screws securing the economy device cover and the diaphragm with its plunger and spring.

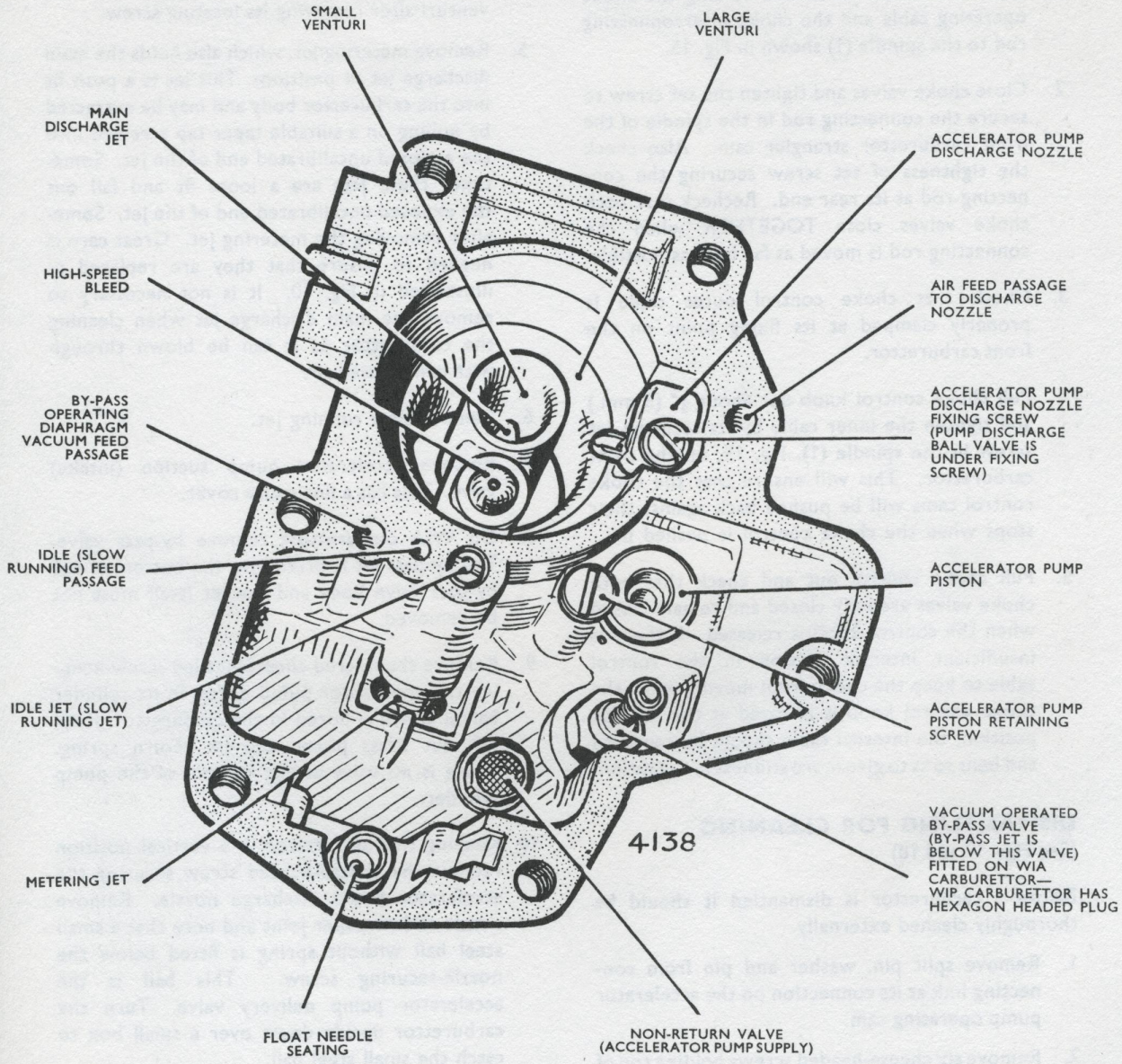

Fig. 17. *Parts visible with top of carburettor removed*

The carburettor is now dismantled sufficiently for cleaning. There is no need to remove the high speed bleed and this cannot be done without damaging it.

INSPECTION AND CLEANING

A list of jet sizes and other specifications for the carburettor is given in the "Data" section at the beginning of this manual.

Check that all jets and orifices are clean and undamaged. When cleaning do not pass a wire or any similar hard material through the jet orifice. These orifices are carefully calibrated and the slightest alterations of size will affect the flow through them.

If a change of jet size is necessary, obtain a new jet from the makers. Do not attempt to ream or otherwise tamper with the old one.

Inspect all valve seats and ensure that they are perfectly clean and free from foreign matter. All parts should be washed with clean fuel and all passage-ways in the carburettor bodies should be blown through with **CLEAN** compressed air. An exploded view of the carburettor is shown in Fig. 18 and the names of the various parts given on the adjoining page.

Reassembly

This is of course a reversal of the dismantling procedure. Close attention should be given to the following points:—

1. The top cover gasket should be renewed to ensure that no air leaks into the slow running passage-ways.
2. Joints on each side of the by-pass valve operating diaphragm should also be renewed.
3. On WIA carburettors, diaphragm spring must seat squarely in the metal cup on the top of the diaphragm when replacing the cover.
4. The small gasket below the accelerator pump discharge nozzle should be renewed.
5. The synthetic rubber ring fitted in the groove around the metering jet just above its hexagon head, must be in good condition.
6. The accelerator pump delivery valve ball must be replaced before inserting the discharge nozzle screw.

   THIS BALL MUST NOT BE TAPPED ON OT ITS SEATING.

   If this is done, it may jam into the hole immediately below its seating.
7. A little jointing compound should be used on the heat insulator faces when refitting the throttle body to the main carburettor body.

AIR INTAKE SILENCERS—Alpine

The removable air intakes can become partly blocked with dust which may eventually restrict the air flow enough to reduce top end performance or increase fuel consumption.

These gauzes should be occasionally removed and cleaned by washing in paraffin (kerosene). After cleaning they should be blown dry with compressed air, or alternatively allowed to drain dry.

OIL BATH AIR CLEANER AND SILENCER—Rapier

The intervals at which the oil bath air cleaner needs to be serviced will vary according to the conditions under which the car is operating.

For town work or areas where the roads are relatively dust free, every 3,000 miles (4,800 km.) can be taken as a guide, although in territories where the roads are bad and dust is prevalent, servicing should be carried out more frequently.

To clean and re-oil Air Cleaner

1. Slacken clip on hose connecting top of air box to air cleaner.
2. Undo the thumb screw in centre of air cleaner and lift off cover. Remove oil bath container.

(Continued on page 32)

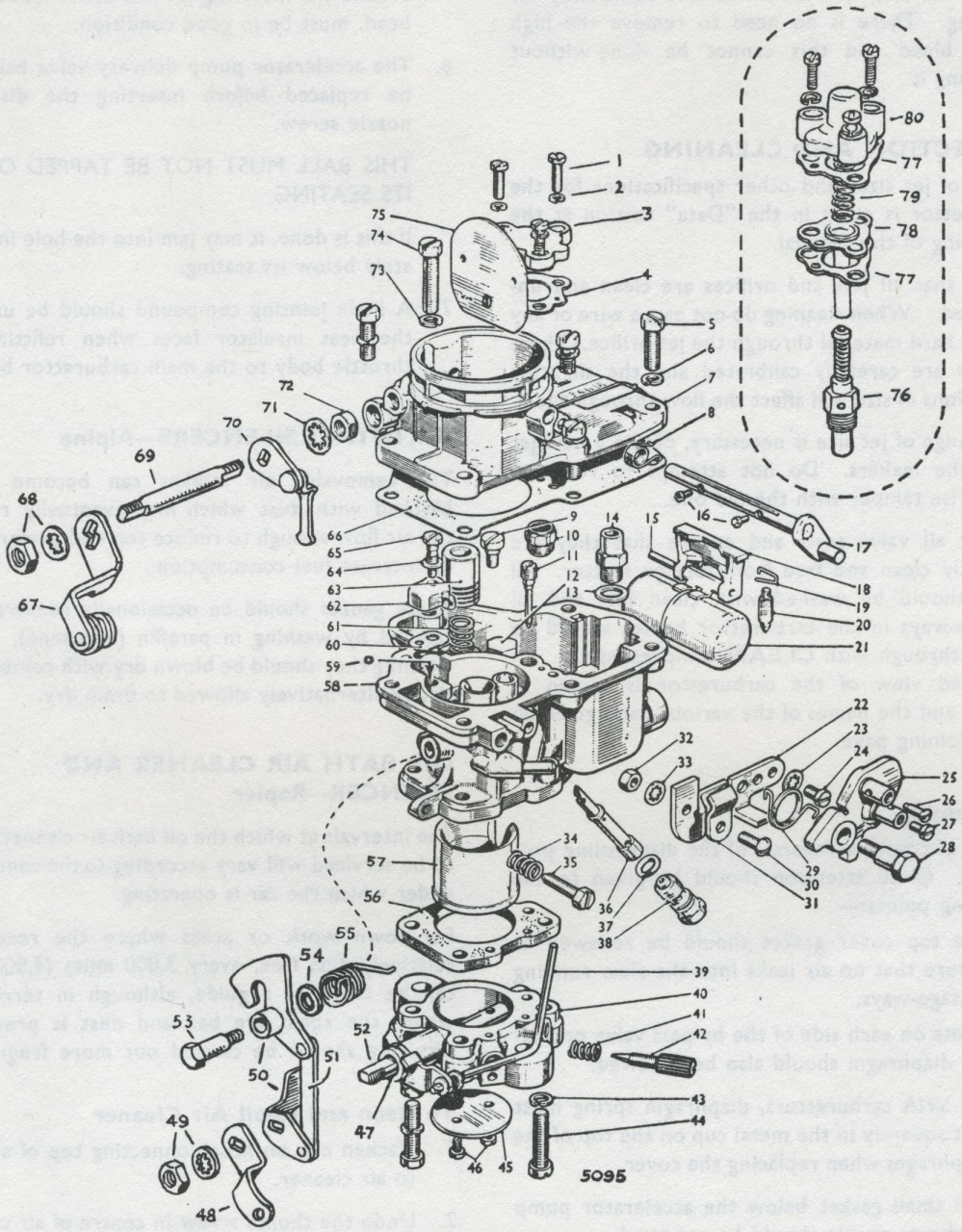

Fig. 18. *Exploded view of carburettor.*
Items 76 to 80, shown in inset, are only used on the WIA carburettor

CARBURETTOR PARTS—See Fig. 18.

1 Cover screw.
2 Spring washer.
3 Cover.
4 Cover joint.
5 Screw $\frac{1}{4}''$ B.S.F. $\times$ $\frac{3}{4}''$, cheese head.
6 Washer $\frac{1}{4}''$ spring.
7 Float chamber cover.
8 Spring controlling automatic opening of choke.
9 Accelerator pump piston retaining screw.
10 Accelerator pump check valve.
11 Idle jet.
12 Blanking plug. (*WIP carburettor only*).
13 Joint (gasket)—needle valve seating.
14 Needle valve seating.
15 Float pivot.
16 Screw, special—butterfly to spindle.
17 Choke spindle complete with lever.
18 Float pivot bracket.
19 Clip—needle valve.
20 Needle valve.
21 Float.
22 Bracket assembly—control cable.
23 Washer $\frac{3}{16}''$ shakeproof.
24 Screw No. 10 U.N.F. $\times$ $\frac{7}{16}''$, fillet head.
25 Cam lever—choke control.
26 Screw securing choke control cable.
27 Screw, special—fast idle rod to swivel.
28 Screw—choke control lever swivel.
29 Spring—choke control lever.
30 Screw 2 B.A. $\times$ $\frac{1}{2}''$, cheese head.
31 Clip.
32 Nut 2 B.A.
33 Washer $\frac{3}{16}''$ shakeproof.
34 Slow running speed screw spring.
35 Slow running speed adjusting screw.
36 Main discharge jet.
37 Sealing ring—metering jet.
38 Metering jet.
39 Floating lever complete with rod.
40 Carburettor throttle body.
41 Slow running volume control screw spring.
42 Slow running volume control screw.
43 Washer $\frac{1}{4}''$ spring } Throttle body to main body.
44 Screw $\frac{1}{4}''$ B.S.F. $\times$ 1″ cheese head } Throttle body to main body.
45 Throttle butterfly.
46 Screw—butterfly to spindle.
47 Bearing—floating lever.
48 Throttle lever. } Throttle spindle.
49 Nut and shakeproof washer. } Throttle spindle.
50 Stop plate complete with link and cam.
51 Link, attached to stop plate and cam.
52 Throttle spindle.
53 Shouldered bolt.
54 Washer.
55 Cam return spring.
56 Heat insulator—throttle body to main body.
57 Choke tube (Venturi).
58 Main body.
59 Accelerator pump discharge ball valve.
60 Accelerator pump discharge nozzle gasket.
61 Accelerator pump piston spring.
62 Accelerator pump discharge nozzle.
63 Accelerator pump piston.
64 Nozzle retaining screw gasket.
65 Accelerator pump discharge nozzle retaining screw.
66 Float chamber cover gasket.
67 Accelerator pump operating roller and lever.
68 Nut and shakeproof washer.
69 Accelerator pump operating spindle.
70 Accelerator pump internal operating lever complete with push rod.
71 Washer $\frac{5}{16}''$ shakeproof.
72 Nut.
73 Washer $\frac{1}{4}''$ spring.
74 Screw $\frac{1}{4}''$ B.S.F. $\times$ $1\frac{1}{2}''$, cheese head.
75 Choke butterfly.
76 By-pass valve and jet. } *WIA carburettor only.*
77 Diaphragm gaskets. } *WIA carburettor only.*
78 Diaphragm and plunger. } *WIA carburettor only.*
79 Diaphragm return spring } *WIA carburettor only.*
80 Diaphragm cover. } *WIA carburettor only.*

3. Swill the filter gauze (which is attached to the cover) in paraffin (kerosene) and blow dry with an air line or allow to drain thoroughly.
4. Clean out the oil bath and refill with clean engine oil up to the level mark.
5. Replace the oil bath container, refit the filter cover with gauze and tighten thumb screw.
6. Tighten the clip on the hose connection on the air box above the carburettors.

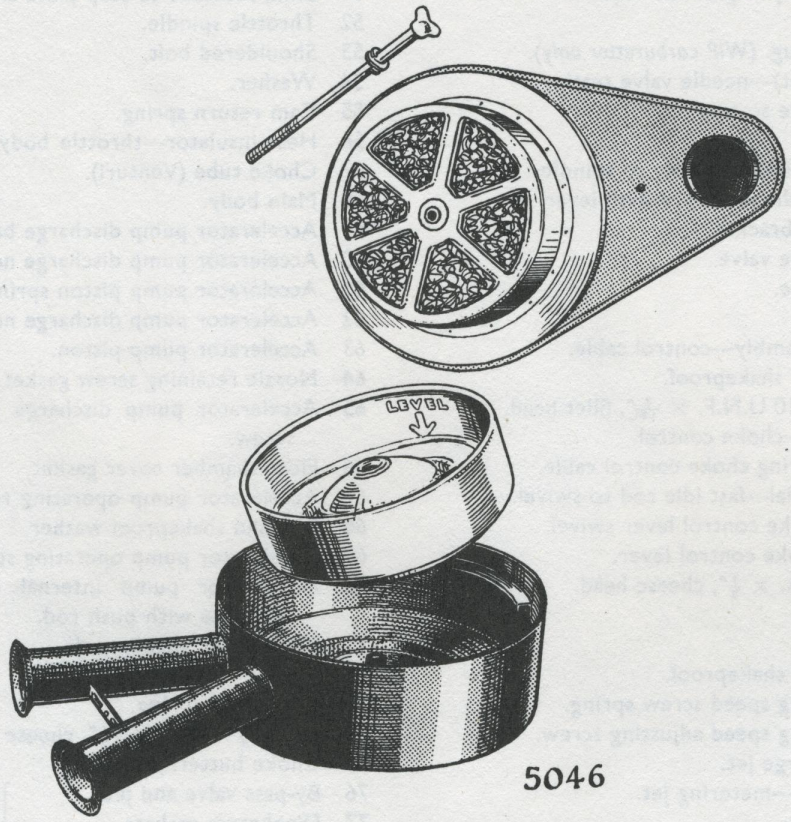

Fig. 19. *Oil bath air cleaner used on Rapier*