FUEL SYSTEM

SECTION C

CONTENTS

AC FUEL PUMP

DESCRIPTION (See Fig. 1)

The A.C. mechanically operated pump is mounted on the right-hand side of the engine and operated by an eccentric on the camshaft. A gauze filter and glass cover bowl are incorporated with the pump.

As the engine camshaft revolves an eccentric (7) actuates the fuel pump rocker arm (6) pivoted at (8) which pulls the pullrod (11) together with the diaphragm (13) downwards against spring pressure (12) thus creating a depression in the pump chamber (15). Fuel is then drawn from the tank and enters the glass bowl from the pump intake (3). After passing through the filter gauze (17) and the inlet valve (1) it enters the pump chamber (15).

On the return stroke, pressure of the spring (12) pushes the diaphragm (13) upwards forcing fuel from the chamber (15) through the outlet valve (16) and outlet (14) to the carburettor. When the carburettor bowl is full the float will shut the needle valve, thus preventing any flow of fuel from the pump chamber (15). This will hold the diaphragm (13) downwards against the spring (12) pressure and it will remain in this position until the carburettor requires further fuel and the needle valve opens.

The rocker arm (6) operates the connecting link (9) by making contact at (5) and this construction allows idling movement of the rocker arm when there is no movement of the fuel pump diaphragm.

The spring (4) keeps the rocker arm (6) in constant contact with the eccentric (7) to eliminate noise.

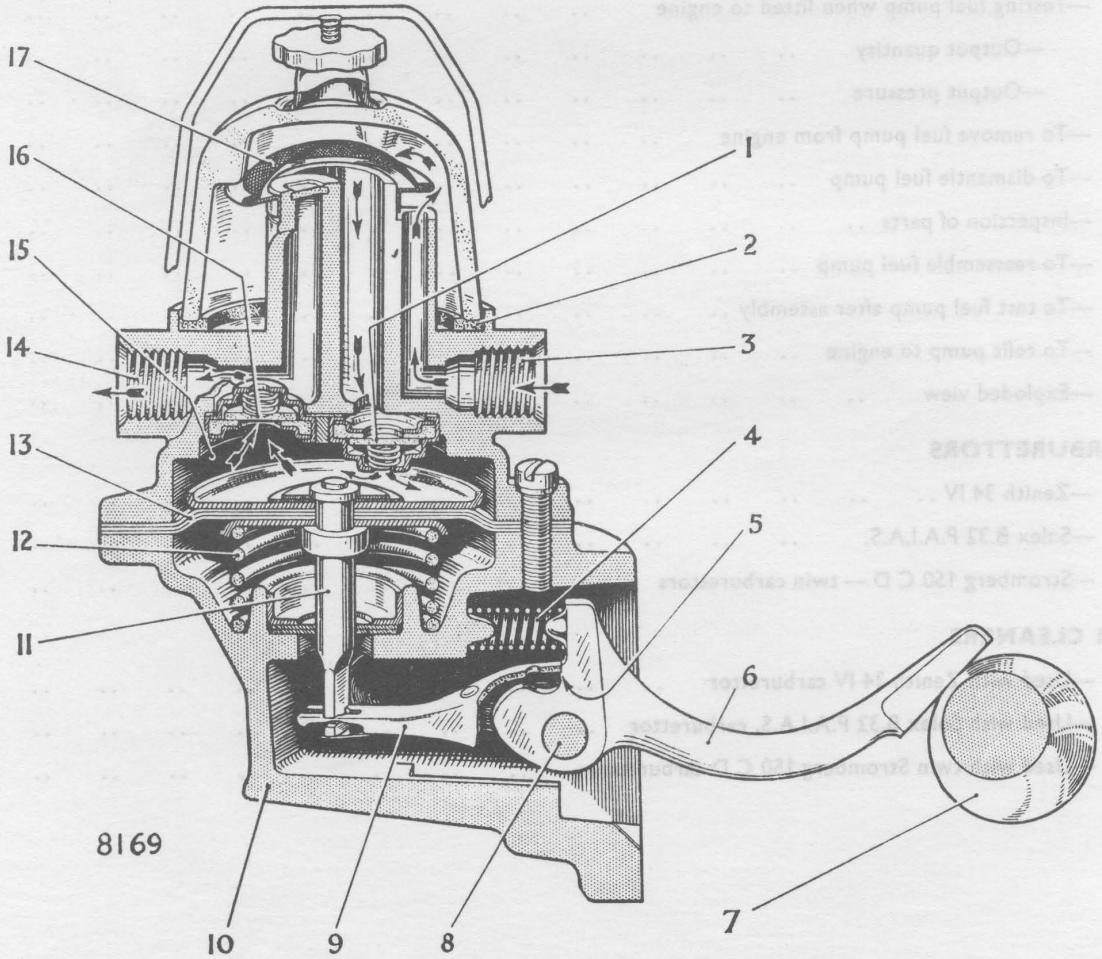

Fig. 1. *Sectional view of fuel pump*

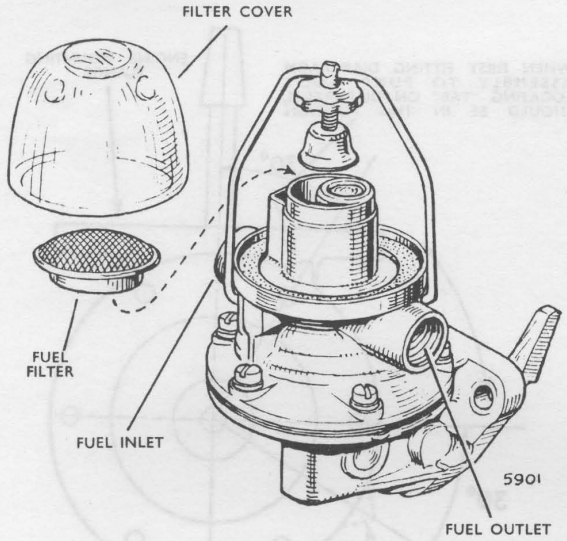

Fig. 2. *Fuel pump filter*

FILTER (See Figs. 1 and 2)

To gain access to the filter gauze for cleaning, first remove the glass bowl, after slackening the securing screw and swinging the fixing clamp to one side.

The washer (2) and filter (17) can then be removed from the main casting. Wash the filter in clean fuel, and replace it before fitting the washer.

When refitting see that the washer is in good condition and properly seated. Do not overtighten the securing screw or the excessive pressure will cause rapid deterioration of the joint.

FUEL SHORTAGE AT CARBURETTOR

If the pump fails to deliver fuel to the carburettor the following points should be checked:

1. That fuel is available in the tank and that the unions in the pipe connecting the tank to the pump are tight.
2. That the pump filter is clean and that the washer below the filter cover is in good condition.
3. The action of the pump, proved by revolving the engine with the starter with the delivery pipe (pump to carburettor) disconnected.

TESTING FUEL PUMP WHEN FITTED TO ENGINE

The fact that a fuel pump gives a spurt of fuel, once every two engine revolutions, shows that it is delivering fuel. This should not be taken as an indication that the pump is delivering fuel at its proper rate of discharge.

Output quantity

The fuel pump output can be checked by disconnecting the fuel feed pipe, from the carburettor end, and fitting a tee piece between the fuel pipe end and carburettor.

A flexible pipe is connected to the tee piece and used to feed fuel into a measuring container.

The engine should be run at 1,500 to 2,000 r.p.m. The fuel pump output should be:

1 pt. (·56 litres) in 1 minute.

If air bubbles are seen in the fuel discharged into the measuring container, they indicate that air is being drawn in with the fuel. This can be due to a low level of fuel in the fuel tank, loose fuel pipe unions, cracked fuel pipe, leaks at the fuel pump bowl, joint valves, valve gasket, or porous diaphragm. Supplying the fuel pump from a separate source will show if the pump is drawing air, or if it comes from the supply before the pump.

Fuel pump output can be reduced by a partially blocked fuel pipe or by obstruction where the fuel feeds to the fuel pipe connection inside the fuel tank.

Output pressure

Excessive fuel pump pressure can be a cause of heavy fuel consumption. This can be checked and if necessary rectified as follows:

1. Disconnect the pipe to the carburettor at the pump.
2. A mercury manometer or a suitable reliable pressure gauge calibrated up to 6 lb. per sq. in. (0·422 kg. per sq. cm.) should then be connected to and as near as possible, on the same level with the outlet on the pump.
3. Rotate the engine on the starter. A reading similar to that given in the Data Section under "Fuel System" should be recorded on the gauge.

To remedy excessive output pressure additional packings should be fitted between the fuel pump flange and cylinder block pump mounting face.

Excessive output pressure can be caused by stiffening up of the pump diaphragm, and the diaphragm condition should be checked on any pump that has been in service for a long time.

Care should be taken to avoid the use of an excessive number of packings as this can cause fuel starvation under full throttle conditions.

The pump output, and output pressure, should always be rechecked after adding or removing packings.

TO REMOVE FUEL PUMP FROM ENGINE

Disconnect the fuel pipes by undoing their unions on the fuel pump body. When necessary blank end of fuel pipe to prevent loss of fuel. Remove the two nuts holding the pump to the engine crankcase and lift away pump carefully noting the number of joints used between the pump mounting face and the crankcase face.

TO DISMANTLE FUEL PUMP (See Fig. 4)

Before commencing to dismantle the pump thoroughly clean the exterior and make a mark across the two flanges of the pump housing, as a guide when reassembling. Remove the six securing setscrews (19) and separate the two halves of the main casting.

Turn the diaphragm and pull-rod assembly (7) through an angle of 90°, when it may be disconnected from its securing slot in the connecting link (13) and withdrawn. Remove the diaphragm spring (10).

The diaphragm and pull rod are a permanent assembly and no attempt should be made to separate the parts.

Secure rocker arm (15) in vice and tap face of body mounting flange with a soft mallet until the two retainers (17) are dislodged.

The rocker arm (15) together with the connecting link (13), spring (16) and washers (14) may now be removed. The valves (6) are a press fit into the valve body (4). They are also staked in position and should only be removed when they have to be renewed, as they have to be levered out with a screwdriver, which destroys them.

INSPECTION OF PARTS

Thoroughly clean all parts in paraffin. The valve body (4) and valves (6) should be further washed in clean paraffin.

The diaphragm and pull rod assembly should be renewed if there is any sign of hardening or cracking.

All badly worn parts must be renewed and very little wear may be tolerated on the rocker arm pin, holes and engagement slot in link, holes in rocker arm, contact face of rocker arm or pull rod.

The valve assemblies cannot be dismantled and should be renewed where necessary.

Check the diaphragm spring, although this seldom requires replacement. Where necessary ensure that the replacement spring has the same identification colour and consequently the same strength as the original.

All gaskets and joints should be renewed as a matter of routine, including the oil seal washers located round the diaphragm pull-rod.

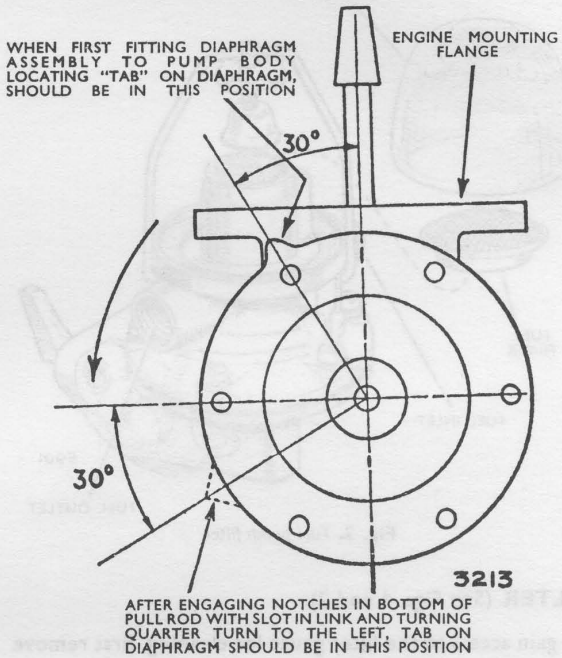

Fig. 3. *Fitting diaphragm assembly*

TO REASSEMBLE FUEL PUMP

If new valves (6) have to be fitted new valve gaskets (5) should be put in the bottom of the valve seat bores. The valves must be assembled in the valve body (4) as illustrated in Fig. 1. If fitted in any other way the pump will not operate.

Press the new valves (6) into the valve body (4) with a piece of steel tubing having an outside diameter of $\frac{3}{4}$ in. (19 mm.) and an internal diameter of $\frac{9}{16}$ in. (14·3 mm.). Then stake the valve body (4) in six places around each valve with a suitable punch.

Assemble the link (13), rocker arm (15) and packing washers (14) onto the pivot pin (18). Place this assembly into the main body (11) and then add the rocker arm return spring (16) making sure that it seats correctly. Tap new retainers (17) into the main body (11) until they press hard against the rocker arm pin and then stake over the open ends of the two grooves to secure the retainers. Place the diaphragm spring in position in the pump body. Place the diaphragm assembly over the spring (the pump rod being downwards) and centre the upper end of the spring in the oil seal washer (9).

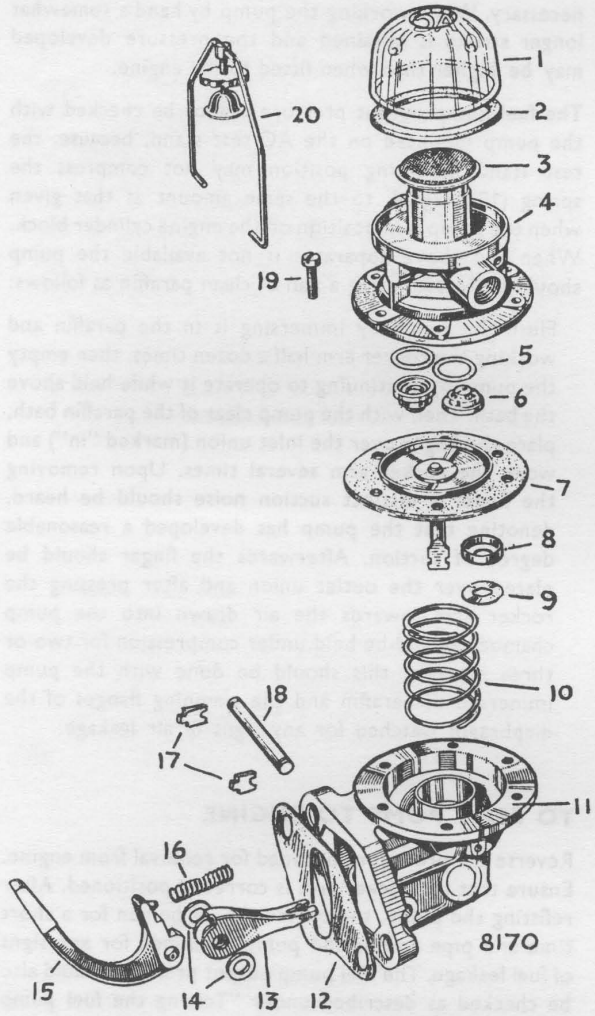

1. FILTER COVER
2. FILTER COVER JOINT
3. FILTER GAUZE
4. VALVE BODY
5. GASKETS — USED BELOW VALVES
6. INLET AND OUTLET VALVES
7. DIAPHRAGM ASSEMBLY
8. OIL SEAL RETAINER
9. OIL SEAL WASHER
10. DIAPHRAGM RETURN SPRING
11. PUMP MAIN BODY
12. JOINT — PUMP TO CYLINDER BLOCK
13. LINK — OPERATING DIAPHRAGM
14. WASHERS
15. ROCKER ARM — OPERATING LINK 13
16. ROCKER ARM RETURN SPRING
17. ROCKER ARM PIN RETAINERS
18. ROCKER ARM PIVOT PIN
19. SCREW — VALVE BODY TO PUMP BODY
20. FILTER COVER RETAINING CLIP

Fig. 4. *Fuel pump—exploded view*

Press downwards on the diaphragm, at the same time turning the assembly to the left in such a manner that the slots on the pull rod will engage the fork in the link. Then turn the assembly a complete quarter turn to the left, which will place the pull rod in the proper working position in the link, and at the same time permit the alignment of the holes in the diaphragm with those in the pump body flanges. When first inserting the diaphragm assembly into the pump body, the locating "tab" on the outside of the diaphragm should be at the position shown in Fig. 3. After turning the diaphragm assembly a quarter turn to the left the "tab" should be in the position indicated by the dotted outline.

The sub-assemblies of the pump are now ready for fitting together, and this is carried out as follows:

Push the rocker arm towards the pump until the diaphragm is level with the body flanges.
Place the upper half of the pump into the proper position, as shown by the mark made on the flanges before dismantling.

Install the cover screws and tighten until the heads of the screws just engage the washers.

Before finally tightening screws, push rocker arm towards pump using about a 4 in. (10 cm.) length of tube slipped

over the end of the rocker arm so as to hold the diaphragm at the bottom of its stroke. Hold in this position and tighten screws alternately. After assembly the edges of the diaphragm should be about flush with the two clamping flanges.

Any appreciable protrusion of the diaphragm indicates incorrect fitting, in which case special care should be paid to maintaining inward pressure on the rocker arm while the diaphragm screws are finally tightened alternately and securely.

Refit filter gauze and filter bowl seating gasket in position. Refit filter bowl as previously described.

TO TEST FUEL PUMP AFTER ASSEMBLY

The best method is by using an AC Delco bench test stand, on which the suction side of the pump is piped from bench height to a tin of paraffin (kerosene) at floor level and the outlet side of the pump connected to a stop tap and pressure gauge.

First, flush the pump through to wet the valves and seats, and then completely empty it again by continuing to operate the rocker arm by hand with the suction pipe clear of the paraffin (kerosene). Again operate pump. Not more than 16 strokes should be necessary to secure delivery of paraffin from the pump outlet.

With the same apparatus a second test can be made by working the pump with the tap on the delivery side closed, pressure then being recorded on the gauge. After ceasing to work the pump it should take several seconds for this pressure to return to zero, thus denoting that the valves are seating properly. Also, while there is pressure, the outer edge of the diaphragm — visible between the two clamping flanges — should be carefully examined for leakage and the retaining screws tightened if necessary. When working the pump by hand a somewhat longer stroke is obtained and the pressure developed may be higher than when fitted to the engine.

The fuel pump output pressure cannot be checked with the pump mounted on the AC test stand, because, the test stand mounting position may not compress the spring (10), Fig. 4, to the same amount as that given when the pump is in position on the engine cylinder block. When the above apparatus is not available the pump should be tested, using a pan of clean paraffin as follows:

Flush the pump by immersing it in the paraffin and working the rocker arm half a dozen times, then empty the pump by continuing to operate it while held above the bath. Then with the pump clear of the paraffin bath, place the finger over the inlet union (marked "in") and work the rocker arm several times. Upon removing the finger a distinct suction noise should be heard, denoting that the pump has developed a reasonable degree of suction. Afterwards the finger should be placed over the outlet union and after pressing the rocker arm inwards the air drawn into the pump chamber should be held under compression for two or three seconds; this should be done with the pump immersed in paraffin and the clamping flanges of the diaphragm watched for any signs of air leakage.

TO REFIT PUMP TO ENGINE

Reverse the procedure outlined for removal from engine. Ensure that the rocker arm is correctly positioned. After refitting the pump, the engine should be run for a short time and pipe unions and pump examined for any signs of fuel leakage. The fuel pump output pressure should also be checked as described under "Testing the fuel pump when fitted to the engine".

CARBURETTOR

TYPE — ZENITH IV

ZENITH IV CARBURETTOR

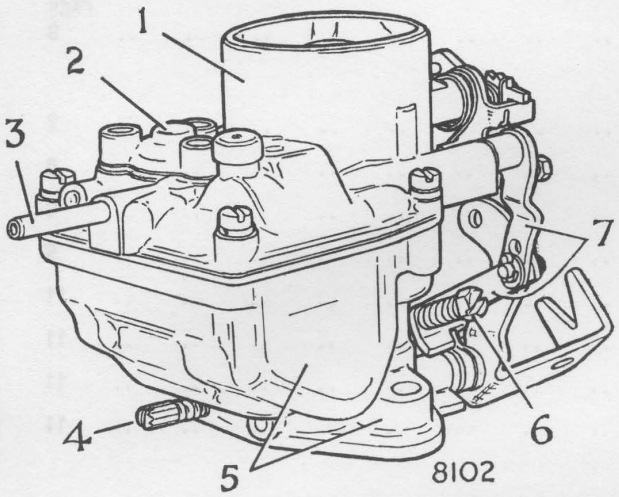

Fig. 1. *Zenith IV carburettor—External view*

Key to Fig. 1

1. CARBURETTOR TOP BODY
2. ECONOMY VALVE COVER
3. FUEL INLET CONNECTION PIPE
4. SLOW RUNNING MIXTURE VOLUME CONTROL SCREW
5. CARBURETTOR MAIN BODY AND FLOAT CHAMBER
6. SLOW RUNNING SPEED ADJUSTMENT SCREW
7. ACCELERATOR PUMP OPERATING LEVER AND LINK (IN SHORT STROKE POSITION)

DESCRIPTION — See Fig. 1

The Zenith 34 IV is a downdraught type of carburettor developed from the Zenith V range of carburettors. 34 denotes the throttle bore diameter in millimetres, and IV the type reference letters.

The three main parts of this carburettor are:

1. A float chamber, main body, and choke tube (venturi) made as a die casting (5). There is no separate choke tube.

2. A top cover body (1) held by four cheese head screws to the main body.

3. An emulsion block having an extension that forms an inner venturi discharge within the large venturi (choke tube). All fuel jets and the accelerator pump are in the emulsion block, which can be removed from the top cover, with a screwdriver and $\frac{7}{16}$ A.F. spanner.

Twin floats are used in the large float chamber set close to the throttle bore to give a high flooding angle. This controls the fuel level so that performance is not affected by steep inclines, fast acceleration, hard braking or surging on bends.

The fuel inlet (3) on the top body above the float chamber is a parallel tube, to allow the direct connection of a plastic fuel pipe.

An economy device (2), mounted on the top body, operates by inlet manifold vacuum and weakens the mixture under part throttle conditions to give maximum fuel economy.

The accelerator pump lever (7) can be adjusted to have either a long or short stroke, to meet varying climatic conditions.

OPERATION

A summary of the carburettor parts in operation for different engine requirements is given in chart form on page 9.

Float Chamber — See Fig. 2

Fuel enters the float chamber through the connection (40) and the needle valve seating (39). The fuel flow is controlled by the needle (38) and twin floats (37). As the fuel level rises the floats lift, and their connecting arm lifts the needle (38) onto its seat (39) when the correct level is reached. While the engine is running, fuel is used, and the floats lower to admit fuel through the needle valve.

Fuel in the float chamber surrounds the emulsion block, and passes through all submerged jets and channels to rise to the same level as that existing in the float chamber.

Starting from cold — See Fig. 2

When the choke control is pulled fully out into the cold starting position, the lever (7) allows a light spring (1) to AUTOMATICALLY rotate the choke valve spindle and close the choke valve (10). Movement of the lever (7) also lifts the connecting rod (2) which opens the throttle to the correct fast idling position for cold starting.

After switching on the ignition and operating the starter, the engine should start and continue to run, because the choke valve opens a small amount AUTOMATICALLY, to allow the entry of enough air to prevent over richening after the engine starts.

ZENITH IV CARBURETTOR — PARTS IN OPERATION

ENGINE REQUIREMENTS	Float Chamber	Slow-running jet	Progression holes	Main Jet	Compen-sating Jet	Economy device		Accelerator pump
						Full air bleeding	Restricted air bleeding	
Cold starting (with choke valve closed)	●	●	●	●	●		●	
Slow running	●	●						
Fast idling	●	●	●					
Light throttle driving	●			●	●	●		
Wider and wide throttle driving	●			●	●		●	
Sudden acceleration	●			●	●		●	●
Deceleration on closed throttle	●	●						

● In operation.

Over the throttle operating range the main jet gives a progressively greater fuel discharge. This is corrected by the actions of the compensating jet as controlled by the economy device.

The economy device is operated by inlet manifold vacuum which depends upon throttle position. Its action determines whether the carburettor gives an economy mixture or a normal mixture.

While the engine is turning, before its start, the high depression on the jets, caused by the closed choke valve (10), increases their fuel discharge rates and provides the amount of fuel needed for cold starting.

The slight AUTOMATIC opening of the choke valve, directly the engine starts, is caused by atmospheric pressure acting on the larger area of the upper side of the offset pivoted choke valve. This is possible because the pressure below the choke valve, when closed, is reduced below atmospheric directly the engine starts.

When the choke control is returned to its normal position, the lever (7) overrides any automatic movement of the choke valve spindle, and also reduces the fast idle speed to the normal idling speed.

Slow running — See Fig. 2

Under slow running conditions the throttle slow running speed adjustment screw is against its stop and the throttle almost fully closed. In this position the throttle allows enough air to pass to mix with the fuel metered by the slow running jet (24), and provide a suitable slow running mixture.

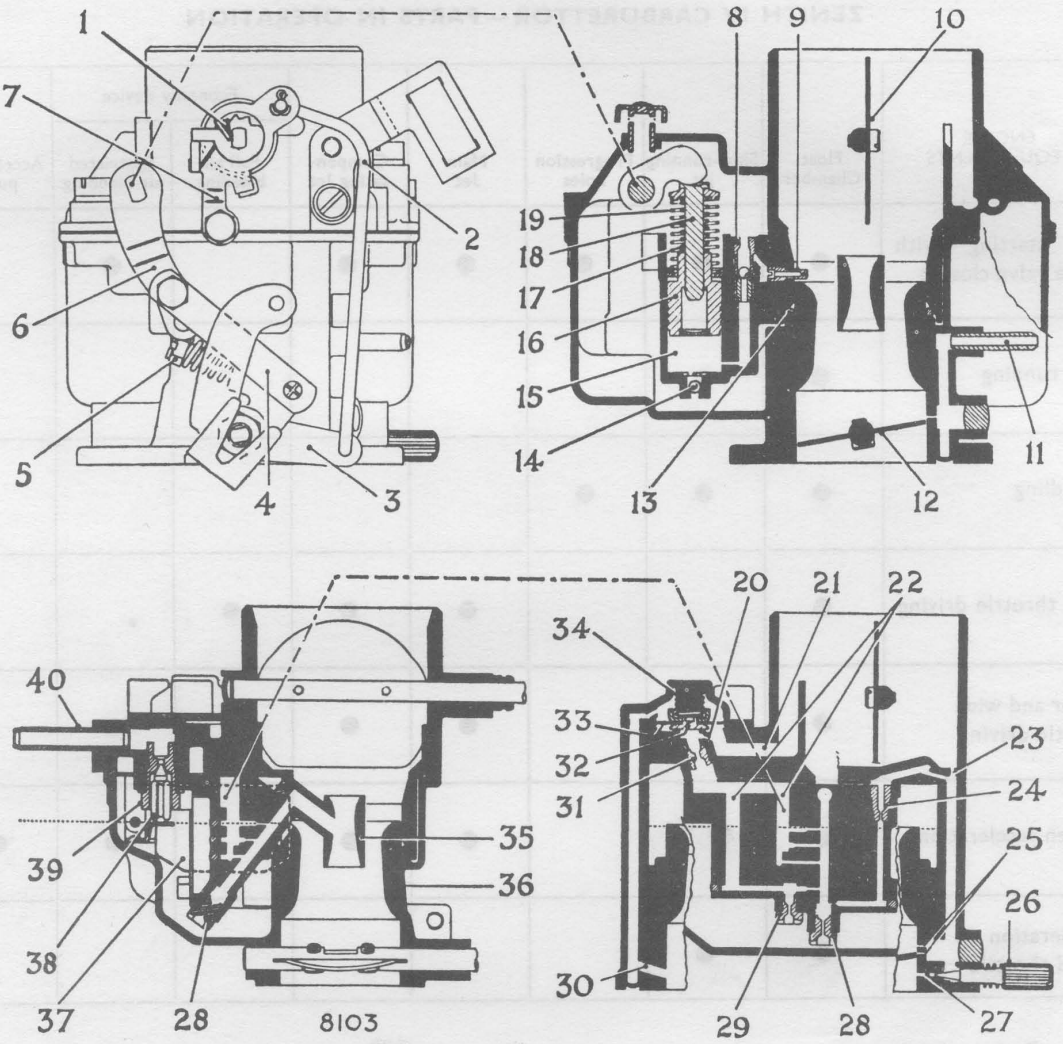

1. CHOKE VALVE CLOSING SPRING
2. CONNECTING ROD
3. FLOATING LEVER ON THROTTLE SHAFT
4. ACCELERATOR PUMP CONNECTING LINK
5. SLOW RUNNING SPEED ADJUSTMENT SCREW
6. ACCELERATOR PUMP LEVER
7. CHOKE VALVE CONTROL LEVER
8. ACCELERATOR PUMP DELIVERY BALL VALVE
9. ACCELERATOR PUMP DISCHARGE JET
10. CHOKE VALVE
11. VACUUM ADVANCE CONNECTION
12. THROTTLE
13. RUBBER "O" RING
14. ACCELERATOR PUMP SUCTION BALL VALVE
15. ACCELERATOR PUMP BORE
16. ACCELERATOR PUMP PISTON
17. ACCELERATOR PUMP PISTON OPERATING SPRING
18. ACCELERATOR PUMP PLUNGER
19. ACCELERATOR PUMP PISTON AND PLUNGER RETURN SPRING
20. FULL THROTTLE AIR BLEED HOLE
21. AIR FEED PASSAGE TO ECONOMY DEVICE
22. CAPACITY WELLS
23. SLOW RUNNING PASSAGE AIR BLEED
24. SLOW RUNNING JET
25. PROGRESSION HOLES
26. SLOW RUNNING MIXTURE VOLUME CONTROL SCREW
27. SLOW RUNNING MIXTURE OUTLET
28. MAIN JET
29. COMPENSATING JET
30. VACUUM FEED PASSAGE TO ECONOMY DEVICE
31. VENTILATION SCREW
32. VALVE FACE ON DIAPHRAGM
33. DIAPHRAGM
34. DIAPHRAGM RETURN SPRING
35. SMALL VENTURI (PART OF EMULSION BLOCK)
36. LARGE VENTURI OR CHOKE TUBE (PART OF MAIN BODY)
37. TWIN FLOATS
38. FLOAT NEEDLE VALVE
39. FLOAT NEEDLE VALVE SEAT
40. FUEL INLET CONNECTION

Fig. 2. *Zenith IV carburettor—Schematic sectional views*

The volume control screw (26) is used to adjust the amount of fuel metered by the slow running jet and emulsified by air entering through the bleed hole (23). This bleed hole (23) also prevents syphoning of the fuel from the float chamber, through the slow running fuel feed system when this system is not working.

The two small holes (25) communicate with the slow running fuel feed channel. Their purpose is to provide additional mixture before fuel commences to discharge from the main and compensating jets. This ensures smooth progressive increase of engine speed or torque, and freedom from hesitation as the throttle is opened from the slow running position.

Part throttle driving — See Fig. 2

As the throttle is opened beyond the fast idling position, depression in the choke tube (36) causes discharge of emulsified fuel into the small venturi (35), which mixes with the air, flowing through the large choke or venturi (36) and throttle opening into the inlet manifold.

This fuel is metered by the main jet (28) and compensating jet (29) which feeds the capacity wells (22). The amount of fuel metered is dependent upon the action of the air bleed system in the emulsion block, which is controlled by the economy device.

Under part throttle driving conditions the economy device allows full air bleeding through the ventilation screw (31). This arrangement provides the weaker mixture that gives the economical consumptions obtained under this driving condition. Combustion of this weaker mixture is assisted considerably by the extra advance given by the vacuum advance mechanism.

Economy device — See Fig. 2

This consists of a diaphragm (33), diaphragm valve (32), diaphragm return spring (34) and cover cap. Inlet manifold depression is fed through the channel (30) to the upper-side of the diaphragm (33) inside the cover cap. These parts operate to control the amount of air bleeding to the passages in the emulsion block.

Until the throttle is opened a considerable amount, inlet manifold vacuum is sufficient to allow atmospheric pressure to lift the diaphragm (33) against its return spring (34) force. This lifts the valve face (32) on the lower side of the diaphragm away from its seating and allows the bleed air flow to be controlled by the ventilation screw (31).

With wide throttle openings, the inlet manifold vacuum decreases, and the diaphragm return spring (34) forces the diaphragm down so that the valve face (32) seats onto the valve seat face in the carburettor body. This reduces the air flow through the vent screw to the amount that passes through the small air bleed hole (20).

Wide throttle driving — See Fig. 2

Under this driving condition the main jet (28) and compensating jet (29) still meter the fuel. They are affected by the much reduced air bleed to the emulsion block channels, and thus provide the required mixture under these driving conditions.

The reduced air bleed is brought about by the action of the economy device.

Acceleration — See Fig. 2

Quick opening of the throttle causes a sudden inrush of air, through the choke tube, to which the main and compensating jets cannot immediately provide the fuel needed to ensure immediate engine response.

To overcome this, a temporary extra supply of fuel is needed, which is metered by the accelerator pump jet, while the accelerator pump piston is moving downwards. When the accelerator pump piston (16) is at the top of its stroke, the pump cylinder (15) is filled with fuel that enters through the pump suction non-return ball valve (14).

As the carburettor throttle opens, the piston rod (18) is forced down, and both the inner spring (17) and outer spring (19) are compressed. Expansion of the inner spring (17), that bears on the top face of the piston (16) forces the piston down which discharges fuel through the non-return ball valve assembly (8) and accelerator pump jet (9). Movement of the piston is limited by a stop on the lower end of the rod (18), and piston movement continues until the stop is reached after the rod has ceased to move downwards in advance of the piston.

The outer spring (19) returns the accelerator pump piston (16) and rod (18) to the top of its stroke, which re-charges the cylinder with fuel, when the throttle is closed as the accelerator pedal is released.

The ball valve (8) has two seatings. The ball lifts onto its upper seating to close off the air vent hole in the top of the valve body, while the accelerator pump is operating, and returns to its lower seating at the end of the pump stroke. It then allows air venting of the accelerator pump jet (9) which prevents the jet from discharging under wide throttle openings and causing excessive fuel consumption.

The accelerator pump stroke is adjustable to suit climatic conditions as described under "ADJUSTMENTS".

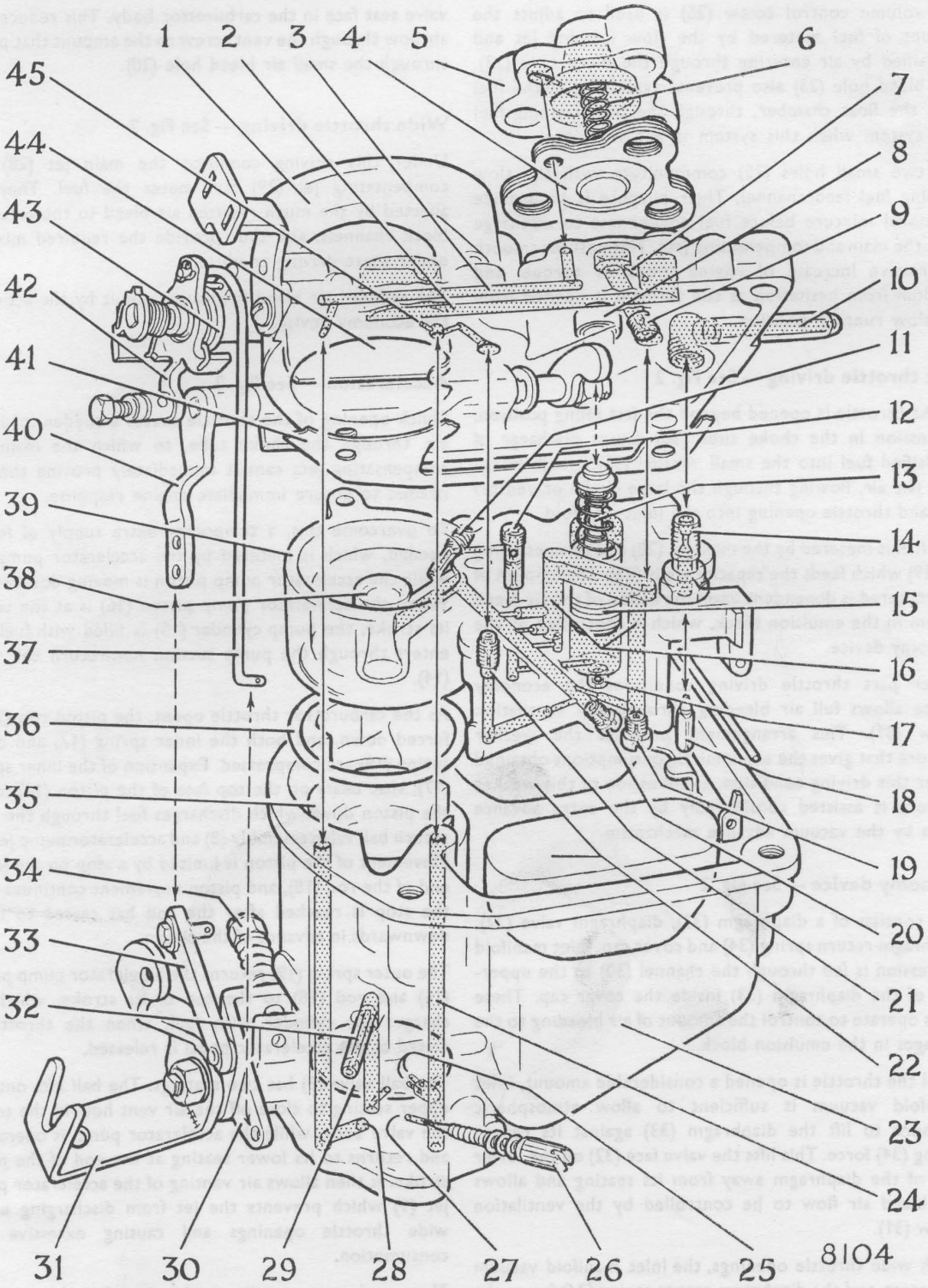

Fig. 3. *Zenith IV carburettor—External and internal details, jets and drillings*

Key to Fig. 3

1. CARBURETTOR TOP BODY
2. AIR FEED PASSAGE TO ECONOMY DEVICE
3. VACUUM FEED PASSAGE TO ECONOMY DEVICE FROM 28
4. DIAPHRAGM
5. DIAPHRAGM COVER
6. DIAPHRAGM RETURN SPRING
7. FULL THROTTLE AIR BLEED HOLE
8. FLOAT CHAMBER AIR VENT
9. VENTILATON SCREW
10. FUEL INLET CONNECTION
11. ACCELERATOR PUMP DISCHARGE JET
12. ACCELERATOR PUMP DELIVERY BALL VALVE ASSEMBLY
13. ACCELERATOR PUMP PLUNGER
14. FLOAT NEEDLE VALVE SEAT
15. ACCELERATOR PUMP PISTON
16. CAPACITY WELLS
17. ACCELERATOR PUMP SUCTION BALL VALVE
18. FLOAT NEEDLE VALVE
19. COMPENSATING JET
20. MAIN JET
21. SLOW RUNNING JET
22. TWIN FLOATS
23. MAIN BODY AND FLOAT CHAMBER
24. SLOW RUNNING FUEL FEED PASSAGE
25. PROGRESSION HOLES
26. SLOW RUNNING MIXTURE VOLUME CONTROL SCREW
27. SLOW RUNNING MIXTURE OUTLET
28. VACUUM FEED TO ECONOMY DEVICE
29. THROTTLE
30. FLOATING LEVER ON THROTTLE SHAFT
31. THROTTLE LEVER
32. VACUUM ADVANCE CONNECTION
33. ACCELERATOR PUMP CONNECTING LINK
34. SLOW RUNNING SPEED ADJUSTMENT SCREW
35. LARGE VENTURI OR CHOKE TUBE (PART OF MAIN BODY)
36. RUBBER "O" RING
37. CONNECTING ROD
38. SMALL VENTURI (PART OF EMULSION BLOCK)
39. EMULSION BLOCK
40. ACCELERATOR PUMP LEVER
41. GASKET — UPPER BODY TO MAIN BODY
42. CHOKE VALVE CONTROL LEVER
43. CHOKE VALVE CONTROL LEVER RETURN SPRING
44. CHOKE VALVE
45. SLOW RUNNING PASSAGE AIR BLEED

STARTING PROCEDURE

Cold starting

When starting the engine from cold, pull the choke control out fully, switch on the ignition and operate the starter.

DO NOT DEPRESS THE ACCELERATOR PEDAL.

The engine should start almost immediately. When the engine has started, the choke control should be pushed in far enough to obtain even running and then, as soon as possible, to within about ½ in. (12 mm.) of its fully back position. In this position the idling speed is increased enough to prevent stalling during the warming up period. When the engine has reached its normal operating temperature, the choke control must be pushed back as far as possible.

Hot starting

Switch on the ignition and operate the starter. If the engine does not start immediately, slightly depress the accelerator pedal while operating the starter.

Extremely hot conditions — starting

If difficulty is experienced under these starting conditions, press the accelerator pedal down fully and hold it in this position while operating the starter.

DO NOT AGITATE THE ACCELERATOR PEDAL.

Directly the engine starts release the accelerator pedal immediately to prevent overspeeding of the engine.

DIAGNOSIS OF FAULTS — See Figs. 3, 4, 5 and 6

The carburettor CANNOT function correctly if the ignition system, fuel supply system, compression or exhaust system are at fault. Unless known to be in perfect condition, these items must be checked as follows before dealing with complaints that can be caused by faulty carburation.

Ignition system

Check spark plug condition. Clean and set gaps.

Check condition and tightness of H.T. and L.T. leads.

Check condition and setting of contact breaker points and contact moving point spring tension.

Ensure that the centrifugal and vacuum advance mechanisms are working correctly.

Check ignition timing. Only small variations from the correct static timing are permissible.

Fuel system

Ensure that an adequate supply of fuel is being delivered to the float chamber.

Check that fuel pump output pressure is correct to the figures given under "Fuel System" in Data Section of this manual.

Examine induction manifold and carburettor flange for air leaks.

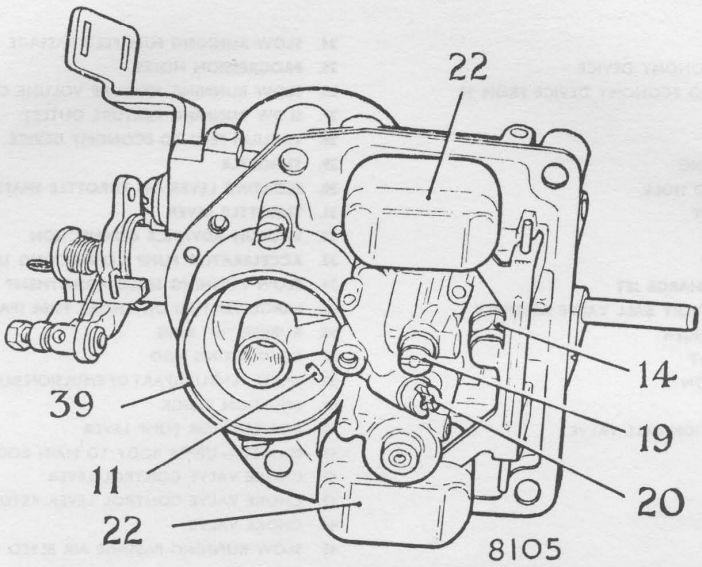

Fig. 4. *Top cover removed showing emulsion block and floats in position, main jet and compensating jet*

Check that the inlet manifold drain pipe is clean.

Ensure that air cleaner is fitted correctly and not restricting air supply to carburettor, due to the element being dirty.

Compression

Check valve clearances and compressions.

Make sure valves are not sticking.

Exhaust system

Check that exhaust pipe has not become damaged or blocked.

Excessive fuel consumption — See Figs. 3, 4 and 5.

Ensure that this complaint is not caused by heavy traffic conditions, hilly country or very adverse driving conditions.

1. Check that the carburettor is not flooding intermittently due to a faulty needle valve and seating or defective float lever.

2. Check that the jets in the carburettor are to the size specified in the Data Section under "Fuel System". New jets should be fitted if it is suspected that any jet has been damaged by cleaning incorrectly with a metal point, or tampered with in any way. It should be noted that the main (20) and compensating jets (19) are cadmium plated, to distinguish them from other jets of similar size and shape, which have a brass finish. Although the brass finished and cadmium plated jets appear to be similar exactly, their flow characteristics are entirely different, and therefore CADMIUM PLATED MAIN AND COMPENSATING JETS MUST ALWAYS BE USED IN THIS PARTICULAR CARBURETTOR.

   Washers are not fitted, or needed under these jets.

3. Remove the air cleaner and check that the choke valve is opening fully when the choke control is pushed backwards to the full extent of its travel.

4. Check that the slow running channel air bleed hole (45) is clear. Stoppage of this hole will allow the slow running jet to meter fuel throughout the whole throttle range and thus provide excess fuel. Without the necessary air vent supplied by the hole (45), fuel can syphon from the float chamber through the slow running system.

5. Dismantle the economy device to check the condition of the diaphragm (4) and its two gaskets used on its upper and lower faces. If a replacement diaphragm is needed also fit a new diaphragm return spring (6) and gaskets. The tension of this spring is important as it controls the operation of the economy device. When re-assembling the economy device, see that the spring beneath the cover is in position and located squarely in the recess of the metal cup on

the upper face of the diaphragm. The three screws that hold the cover to the carburettor top body, must be tightened evenly. Any leakage under the cover face will affect the amount of depression needed to overcome the diaphragm return spring pressure that returns the diaphragm to the closed position. Incorrect action of the economy device diaphragm will increase the fuel consumption by preventing the supply of an economy mixture on part throttle openings.

6. Remove the accelerator pump delivery valve (12) and check that its ball valve moves up and down quite freely. Sediment or gum can stick the ball valve to its upper seating, and this will allow fuel to be drawn from the accelerator pump, when the pump is not operating. This increases the fuel consumption. Usually any tendency for the ball to stick can be overcome by washing the valve assembly in methylated spirits.

7. Check that the "O" ring (36) is in good condition and forming a seal between the emulsion block and carburettor body around the choke tube upper end.

Insufficient top speed — See Fig. 3

1. Check that the throttle lever (31) is opening onto its full throttle stop when the accelerator pedal is fully depressed. Incorrectly fitted carpets can prevent full throttle movement.

2. Check that main and compensating jets (20) and (19) are those specified in the Data Section under "Fuel System".

3. Check that main and compensating jets are not partially blocked and that their air bleed passages are clear, not forgetting the full throttle air bleed (7) drilling inside the economy device.

4. Check that the needle valve seat is free from obstruction and that the float arm is not damaged.

5. Check that the economy device spring (6) is in position. It can be lost by careless servicing of the carburettor.

Faulty slow running — See Figs. 3, 5 and 6

This is caused by an incorrect slow running mixture due either to wrong adjustment of the volume control screw (26) blocked or partly blocked slow running jet (21), or supply of excess air.

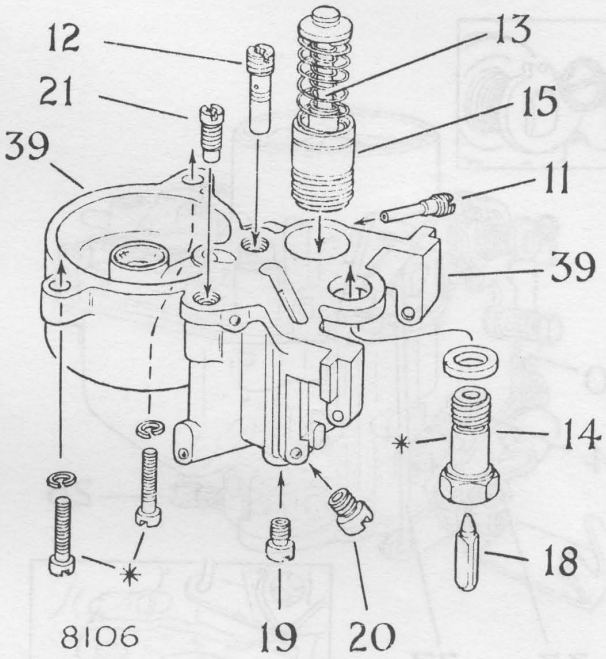

* SCREWS AND SEATING HOLDING EMULSION BLOCK TO TOP BODY

Fig. 5. *Emulsion block fully dismantled*

1. Remove the carburettor top body (1) emulsion block (39) and slow running jet (21). Blow through the jet and passage ways as shown in Fig. 3 with clean compressed air. The long passage way, in the main body of the carburettor can be blown through without removing the carburettor from the inlet manifold, first from below through the volume control screw hole, after removing the volume control screw and blocking the upper end of the passage way with a finger, then from the top with the volume control screw replaced and rotated onto its seat. This ensures that the slow running outlet, and two progression holes are cleared. Check that the volume control screw point is not damaged. Adjust the volume control screw (26) so that it just seats by finger NOT SCREWDRIVER rotation and then rotate it back by 1¼ turns.

2. Check that the volume control screw (26) and slow running speed adjustment screw (34) springs exert enough pressure under the screw heads to prevent them from rotating through the effects of engine vibration.

3. Adjust the slow running mixture and speed as described under "ADJUSTMENTS".

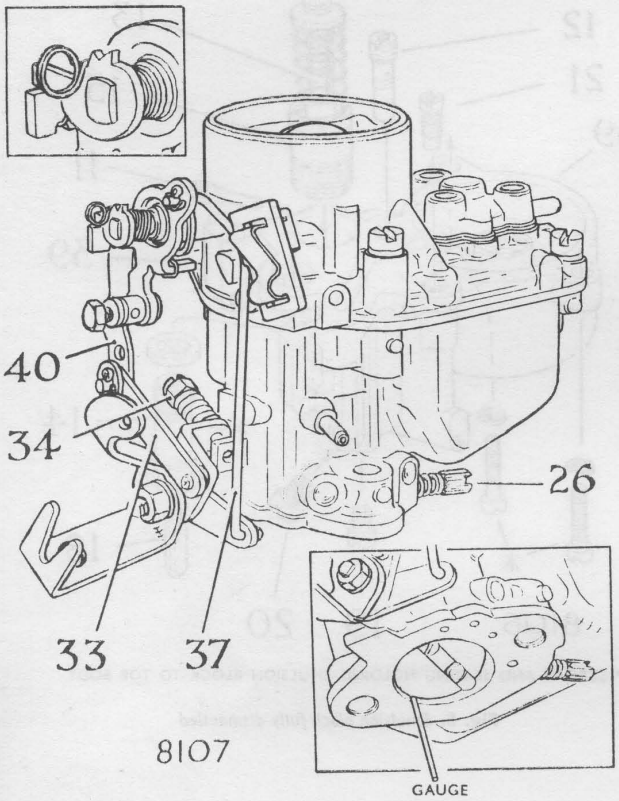

Fig. 6. *External linkage and slow running adjustments*

Flat spot or hesitation at small throttle openings — See Fig. 3

The reason for this fault is a weak mixture occurring immediately the throttle opens from the slow running position, before the main and compensating jets come into operation.

The possible causes are:

1. Incorrect adjustment of the slow running mixture volume control screw (26). See under "ADJUSTMENTS — Slow running" on page 17 of this section.

2. Progression holes (25) blocked or partly blocked.

3. Worn throttle spindle or other possible causes of air leakage into the induction system.

4. Vacuum advance pipe disconnected from the carburettor, pipe or its connection loose, or vacuum advance diaphragm leaking.

Poor acceleration — See Figs. 3, 5 and 6

Should the engine show signs of hesitation and lack of response when the throttle is opened suddenly, the following should be checked.

1. Remove the air cleaner, and while looking into the carburettor, with the engine stopped, open the throttle suddenly over its whole range of movement. Fuel should then be discharged from the accelerator pump jet (11). If little or no fuel is discharged continue with the following procedure.

2. Remove the carburettor top body (1), and emulsion block (39) from the top body. Check that the accelerator pump piston (15) moves freely in its cylinder and is returned by the outer spring around the plunger.

3. Remove the accelerator pump delivery valve (12) and accelerator pump jet (11). Blow through these items and their feed passages with clean compressed air.

4. With the piston (15) removed syringe fuel through the ball valve (17) at the base of the pump bore to make certain that the ball valve will seat on the downward stroke of the piston (15). DO NOT ATTEMPT TO REMOVE THE BALL VALVE SPRING WIRE RETAINER.

5. Refit the accelerator pump piston (15), delivery valve (12) and the accelerator pump jet (11).

6. Hold the emulsion block in a shallow tray of fuel so that the lower part of the accelerator pump is immersed in fuel. Operate the fuel pump. Fuel should then be discharged from the jet (11).

7. Refit the emulsion block (39) to the carburettor top body.

8. Remove the economy device cover and check that the diaphragm (4) is in good condition. During acceleration the valve face on the underside of the diaphragm (4) closes off the passage that allows full air flow through the ventilation screw (9). This reduces the air bleed, causing faster emptying of the capacity wells (16) which supplements the fuel supplied by the pump jet (11). Any air leakage through a faulty diaphragm, or through the diaphragm gaskets, will alter the economy device action.

Difficult starting from cold — See Figs. 3 and 6

Reasons that prevent the carburettor from providing the very rich mixture needed for cold starting conditions are:

1. Lack of fuel supply to the carburettor float chamber.
2. Choke control inner cable adjusted incorrectly, which stops the lever (42) from moving over its whole range of travel, onto its stop against the carburettor body, when the choke control is pulled fully out. This will prevent the choke valve from closing, and can also keep the throttle from opening to the fast idle position for cold starting and cold running.
3. Choke valve not closing when the choke control is pulled out fully. This can occur even when the lever (42) operates correctly, because this lever does not close the choke valve, it only allows the light spring on the choke valve spindle outer end to rotate the choke valve spindle. Any stiffness in the choke valve spindle movement can prevent the choke valve from closing when the choke is pulled out. This can be very deceptive.

   The choke valve action can be checked by pulling the choke control out, checking that the lever (42) comes against its stop, then rotating the outer end of the choke valve spindle in a clockwise direction as far as possible, and releasing the spindle. If the spindle is operating correctly the choke valve will then shut with a distinct snap sound.
4. Interconnection rod (37) between choke operating lever (42) and floating lever (30) not opening the throttle to the fast idle position. To check and adjust this setting see under "ADJUSTMENTS".
5. Gum has been known to form on the float needle and stick it to the needle valve seat when the engine has stopped. This prevented entry of fuel to make up fuel lost by evaporation as the engine cooled down and in consequence the engine could not start. If this occurs the whole fuel system should be cleaned out.

Difficult starting when hot

The reason for this trouble is a very rich mixture caused by any one or more of the following faults.

1. Rich fuel vapour in the inlet manifold due to pumping of the accelerator pedal.
2. Carburettor flooding due to faulty needle valve and seat.
3. Needle valve seat not properly tightened into top body of the carburettor.
4. Fuel level in float chamber too high because of wrong setting of the float mechanism.
5. Fuel supply pressure too high.

ADJUSTMENTS

Slow running — See Fig. 6

The correct slow running speed is given in the Data Section under "Fuel System — Carburettor".

In addition to the carburettor slow running system, reliable and even slow running depends upon good ignition, correct ignition timing, correct valve clearances, even compressions and freedom from air leaks in the induction system.

If any one or more of these items are at fault adjusting the carburettor slow running adjustments will prove difficult.

This adjustment is made when the engine is HOT in the following manner.

1. Adjust the slow running speed adjustment screw (34) until the idling speed is a little faster than normal.
2. Unscrew the slow running mixture volume control screw (26) in an anti-clockwise direction until the engine begins to "hunt", that is, runs on a rich slow running mixture which will decrease the engine speed.

   The slow running mixture volume control screw is quite sensitive to adjust because it regulates the amount of fuel used for slow running. It does NOT control the air feed for slow running.
3. Screw in the volume control screw (26) just enough to stop the engine from "hunting".
4. If the engine speed is now too high reset the throttle adjusting screw (34). This may cause a resumption of "hunting" and further adjustment of the slow running volume control screw (26) may be necessary.
5. Check that the throttle returns to its stop each time that the accelerator pedal is released. Stiffness in the accelerator linkage can prevent this.

The correct idling speed is given in the Data Section under "Fuel System".

Any "hesitancy" or "flat spot", as the throttle is moved from the idling position, when starting from rest or

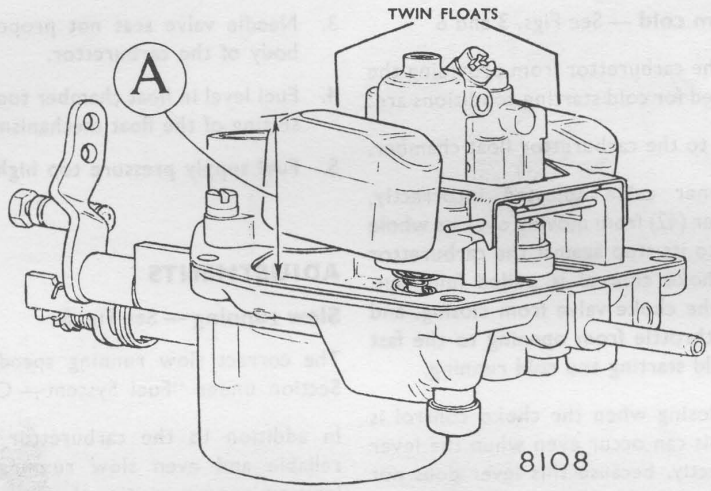

Fig. 7. *Float level settings*

driving slowly, is an indication that the slow running mixture is either too weak or too rich and that further slight adjustment may be needed.

Accelerator Pump Stroke — See Fig. 6

The travel of the accelerator pump piston can be adjusted to give a short or long stroke, to meet summer or winter conditions.

This adjustment is made by altering the position of the link (33) connection in the fuel pump operating lever (40). In Fig. 6 it is shown in the position that gives the shortest pump stroke.

Throttle fast idling position — for cold starting
See Fig. 6

The throttle fast idling position depends upon the length between the outer ends of the interconnecting rod (37). This length is set during the manufacture and normally should not require further adjustment.

When a complaint is made that starting is difficult under cold conditions the fast idle adjustment should be checked by one of the following methods. The second method, which requires removal of the carburettor, should always be used when making this adjustment for extreme cold starting conditions.

Method 1 — *Without removing carburettor*
See Figs. 3 and 6

1. Disconnect the choke control inner cable from the lever (42).
2. Remove the idle speed adjustment screw (34) and take off its stop spring. Replace the screw and rotate it until it just contacts the carburettor body while the throttle is held fully closed.
3. Screw in the slow running speed adjusting screw (34), to open the throttle, by a further ten half turns of screw rotation.
4. Carefully bend the upper end of the connecting rod (37) so that the floating lever (30) just contacts the rear face of the lever, carrying the slow running speed adjustment screw (34), when the lever (42) is moved to the full extent of its travel.
5. Check, by releasing the slow running speed adjustment screw (34) by half a turn and then moving the lever (42) over its whole range of movement. If the rod (37) has been set correctly the throttle lever (31) will just begin to move.
6. Reconnect the choke inner cable to the arm and check that choke cable adjustment is correct.
7. Remove the slow running speed adjustment screw (34) and refit its spring. Refit screw and adjust so that the normal idling speed is obtained.

Method 2 — *Removing the carburettor* — See Figs. 3 and 6

1. Remove the carburettor from the engine.
2. Obtain a gauge, for insertion between the throttle butterfly and throttle barrel to the fast idle throttle setting given in the Data Section under Fuel System. This can be the shank of a drill or a wire of this diameter or wire flattened to this dimension.

3. Move the choke lever (42) to the full extent of its travel. If the connecting rod (37) is correctly set the throttle will have opened just enough to allow the gauge to be inserted between the throttle edge and throttle bore, in a position at a right angle to the centre of the throttle spindle.
4. If necessary carefully set the connecting rod (37) at its upper curved end, so that the throttle opens to the gauge thickness when the lever (42) is moved fully over.
5. Replace the carburettor and adjust the choke cable

Fuel level — See Fig. 7

To check the fuel level remove the carburettor top body and invert it so that the float holds the float needle on its seat. In this position the highest point (A) of the float should be 32—33 mm. from the gasket face.

If necessary bend the float arm, or tag on the float arm, as needed, or fit a thinner or thicker washer under the needle valve seating.

Choke control

The choke control inner cable should be adjusted so that its operating knob is about 2 mm. from the facia, when the choke operating lever is against its "OFF" stop in the carburettor.

Choke valve return spring tension — See Fig. 2

For most cold starting conditions the looped end of the choke valve return spring (1) should be in the vee notch that gives the highest opening movement of the choke valve as shown in Fig. 2. At very low temperatures the spring tension may need increasing by moving the looped end into one of the other two positions, so that the choke valve opening tension is increased.

Full throttle position and accelerator pedal position

An adjustment for setting the accelerator pedal position is provided at the end of the throttle operating shaft.

This adjustment should be set so that full throttle opening is obtained at the carburettor when the accelerator pedal is 1 in. (25 mm.) from the floor covering.

CLEANING IN POSITION — See Figs. 3, 4 and 5

This carburettor can be completely cleaned without removing it from the engine, provided the following procedure is adhered to.

1. Remove the air cleaner. Disconnect the rod (37) at its upper curved end, and the link (33) from the lever (40), noting which of the two holes in the lever to which the link is connected.
2. Remove the fuel feed pipe from its connection (10).
3. Remove the four cheese headed screws holding the top body (1) to the main body (23), and lift off the top body complete with emulsion block assembly (39) as shown in Fig. 4.

Cleaning lower body — See Figs. 3, 4 and 5

1. Remove fuel from the float chamber bowl in the main body with a syringe and clean the bowl by blowing out with clean compressed air.
2. Remove the volume control screw (26) and with a finger block off the upper end of the passage (24). Hold a compressed air feed nozzle in the volume control screw hole and blow air through the slow running outlet (27). Replace the volume control screw (26) and screw it lightly onto its seating.
3. Blow air into the upper end of the passage (24). This cleans the progression outlet holes (25).
4. Unscrew the volume control screw (26) one turn from its screwed down position.
5. Disconnect the vacuum advance flexible feed pipe from its connection (32) and blow air through this passage and the passage connecting to the outlet (28).

This completes the cleaning of the carburettor lower body.

Cleaning emulsion block — See Fig. 5

1. Remove the twin float assembly (22) by withdrawing its pivot pin. Also remove the float needle valve (18).
2. Remove the two cheese headed screws and float needle valve seating (14) and lift the emulsion block assembly, taking care to prevent the accelerator pump piston (15) assembly from becoming damaged, as it can fall out as the emulsion block is removed.
3. Remove the slow running jet (21) pump discharge valve (12), pump jet (11), compensating jet (19) and main jet (20). NO ATTEMPT should be made to remove the non-return ball valve (17).
4. Wash the jets and pump discharge valve in fuel. Also wash the accelerator pump, piston, piston bore, and non-return ball valve (17) with fuel.
5. Blow through the non-return valve (17) from its lower side, all jets, the pump discharge jet (11) and the needle valve seat (14) with clean compressed air.
6. Blow through all the passages shown in the emulsion block (39) in Fig. 1.
7. Refit all parts to the emulsion block that were removed for cleaning.

Cleaning top body — See Fig. 3

1. Remove the economy device cover (5), spring (6) and diaphragm (4). Inspect condition of diaphragm and renew if required.

continued on page 22

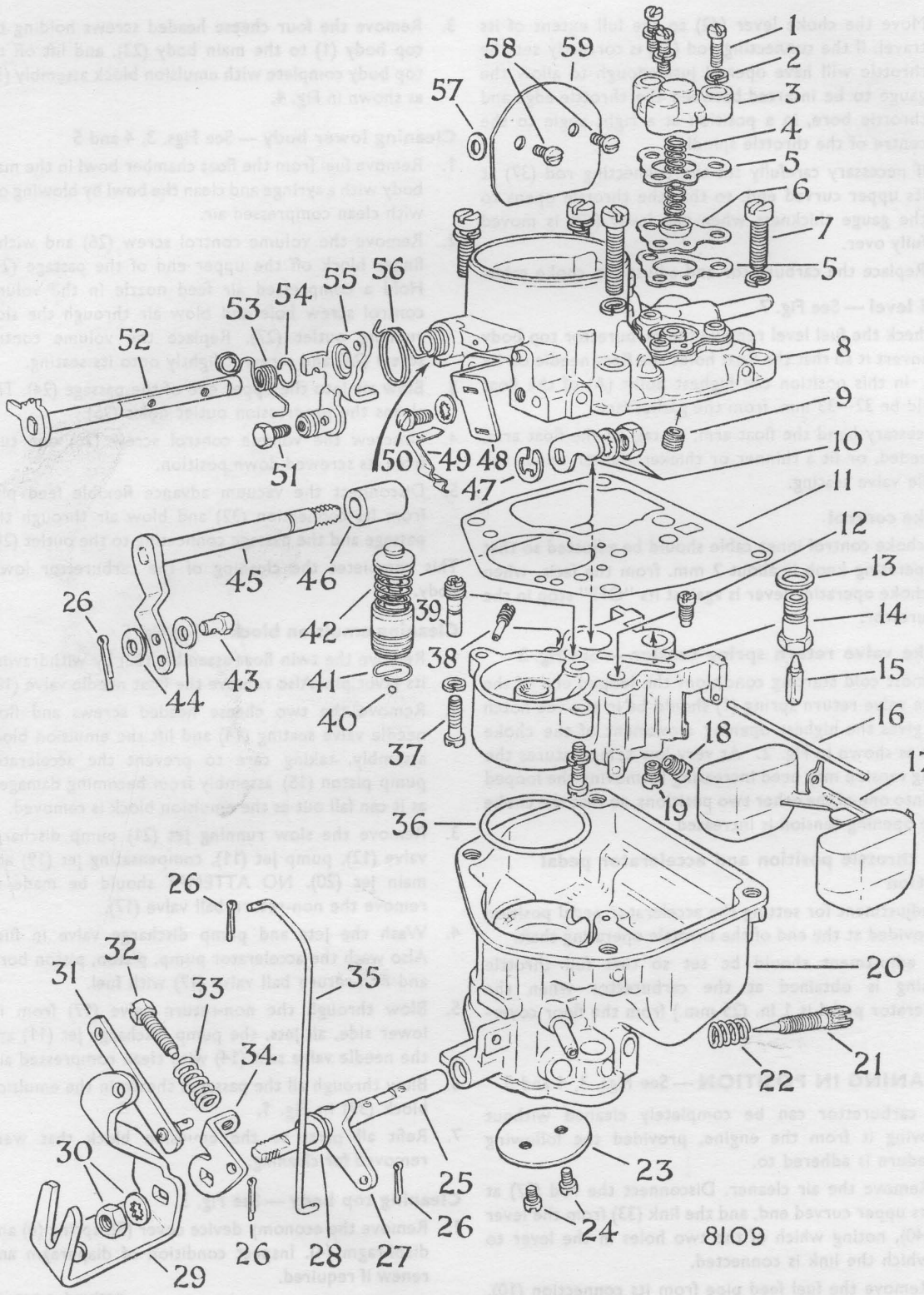

Fig. 8. *Zenith IV carburettor—Exploded view*

Key to Fig. 8

1. FIXING SCREW—ECONOMY DEVICE COVER—THREE
2. SPRING WASHER — THREE
3. ECONOMY DEVICE COVER
4. DIAPHRAGM RETURN SPRING
5. GASKETS ABOVE AND BELOW DIAPHRAGM—TWO
6. ECONOMY DEVICE DIAPHRAGM
7. TOP COVER FIXING SCREWS AND SPRING WASHERS—THREE SHORT AND ONE LONG
8. FLOAT CHAMBER COVER AND INTAKE
9. VENTILATION SCREW
10. ACCELERATOR PUMP INTERNAL LEVER, NUT AND SHAKEPROOF WASHER
11. GASKET
12. SLOW RUNNING JET
13. WASHER FOR NEEDLE SEATING
14. FLOAT NEEDLE VALVE SEATING
15. FLOAT NEEDLE VALVE
16. FLOAT ARM PIVOT
17. TWIN FLOATS
18. MAIN JET
19. COMPENSATING JET
20. COMBINED MAIN BODY AND FLOAT CHAMBER
21. SLOW RUNNING MIXTURE VOLUME CONTROL SCREW
22. SPRING FOR VOLUME CONTROL SCREW
23. THROTTLE VALVE
24. THROTTLE FIXING SCREW — TWO
25. THROTTLE SPINDLE
26. SPLIT PINS
27. FLOATING LEVER
28. PLAIN WASHER
29. THROTTLE LEVER
30. THROTTLE LEVER FIXING NUT AND SHAKEPROOF WASHER
31. ACCELERATOR PUMP LINK
32. SLOW RUNNING SPEED ADJUSTMENT SCREW
33. SPRING FOR ADJUSTMENT SCREW
34. THROTTLE STOP LEVER
35. INTERCONNECTION ROD
36. RUBBER "O" RING
37. EMULSION BLOCK FIXINGS SCREWS AND SPRING WASHERS—TWO
38. ACCELERATOR PUMP DISCHARGE JET
39. ACCELERATOR PUMP DISCHARGE VALVE
40. ACCELERATOR PUMP INTAKE BALL VALVE
41. INTAKE BALL VALVE RETAINER
42. ACCELERATOR PUMP PISTON, PISTON ROD AND SPRING ASSEMBLY
43. PIVOT PIN FOR PUMP LINK
44. WASHERS — TWO PLAIN
45. ACCELERATOR PUMP SPINDLE AND LEVER
46. DISTANCE PIECE
47. RETAINING RING—ACCELERATOR PUMP SPINDLE
48. CHOKE CABLE BRACKET
49. CLIP — CHOKE CABLE TO BRACKET
50. BRACKET FIXING SCREW AND SHAKEPROOF WASHER
51. SET SCREW—CHOKE CABLE TO LEVER TRUNNION
52. CHOKE VALVE SPINDLE
53. CHOKE VALVE CLOSING SPRING
54. CIRCLIP
55. CHOKE VALVE CONTROL LEVER
56. CHOKE VALVE CONTROL LEVER RETURN SPRING
57. THIN BRASS WASHER—USED BETWEEN CHOKE VALVE AND CARBURETTOR BORE
58. CHOKE VALVE FIXING SCREWS — TWO
59. CHOKE VALVE

2. Blow through the passages (2) and (3), the anti-syphon drilling (45), and the ventilation screw (9). Make sure that the small full throttle air drilling (7) and the vacuum hole in the cover (5) are clear.

3. Blow through the fuel feed (10) and the air vent (8).

4. Refit the economy device parts (4), (5) and (6), using new joints above and below the diaphragm (4).

Reassembly

This is a reversal of the dismantling procedure. A new joint should be used between the carburettor top body and emulsion block, and carburettor lower body.

The accelerator pump operating link should be replaced in the same hole in the pump operating lever, from which it was removed, if this position gave satisfactory acceleration.

A fully exploded view is given in Fig. 8.

TO REMOVE AND REFIT

To remove

Remove air cleaner.

Disconnect fuel feed pipe, throttle operating shaft and choke control.

Remove two nuts and washers holding the carburettor to its flange on the inlet manifold.

To refit

Before refitting the carburettor its flange should be checked for flatness on a small surface plate, or other suitable flat surface. Using a straight edge is not satisfactory.

After refitting the carburettor, the choke control inner cable should be adjusted as described under "ADJUSTMENTS".