ENGINE

SECTION B

CONTENTS

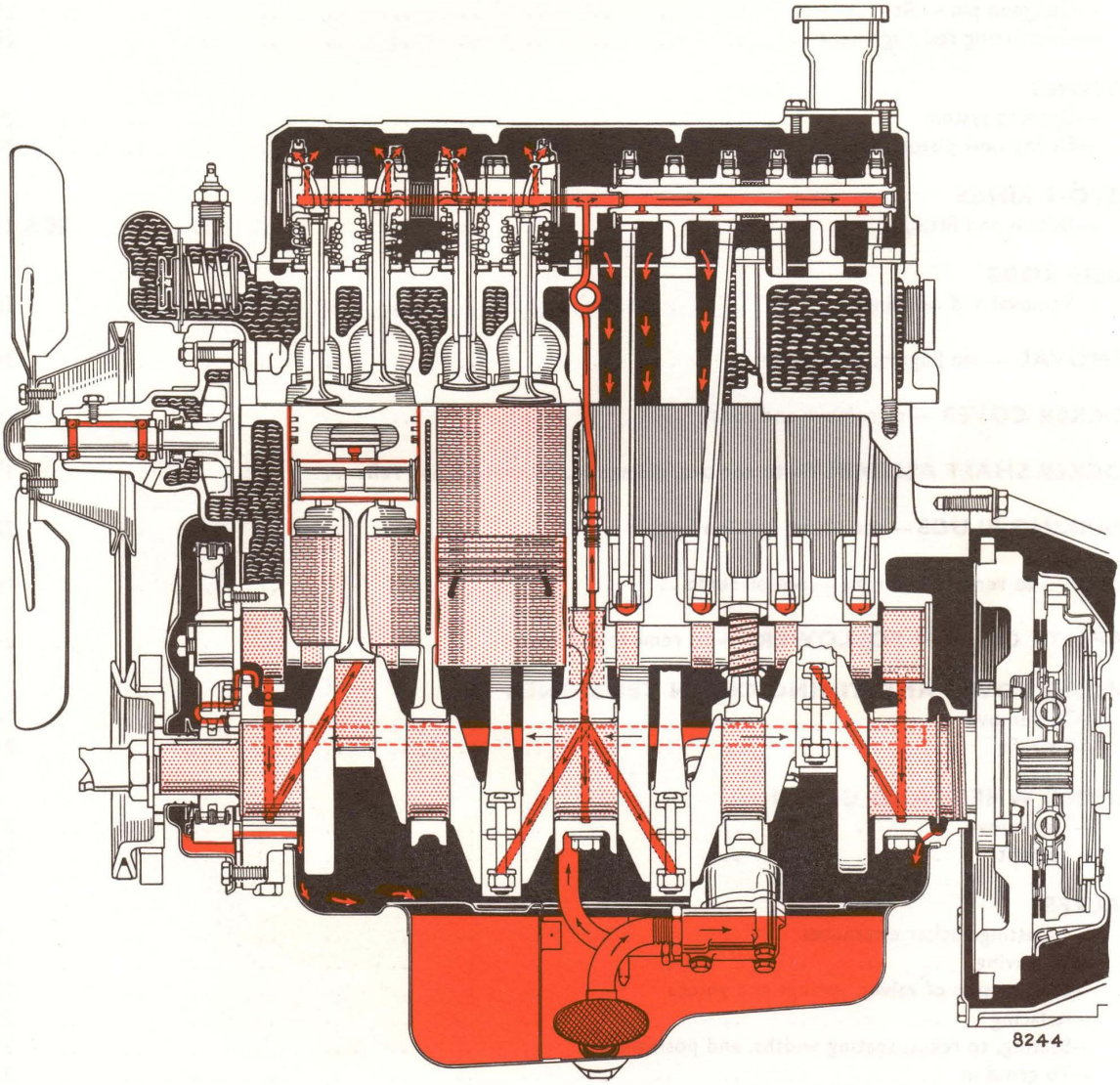

Fig. 1. *Engine—Longitudinal section of engine with aluminium cylinder head.*

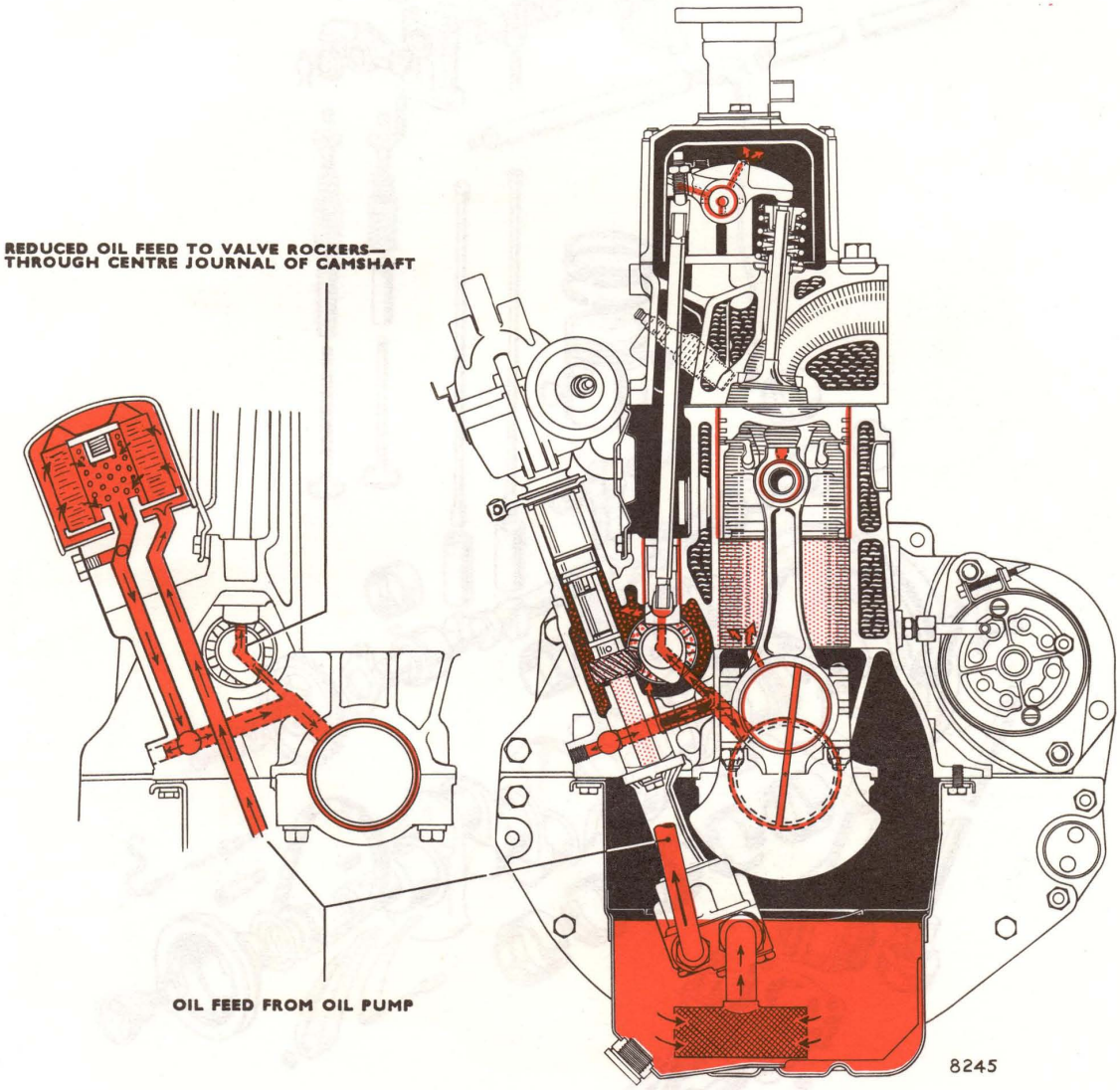

Fig. 2. *Engine—Cross section of engine with aluminium cylinder head.*

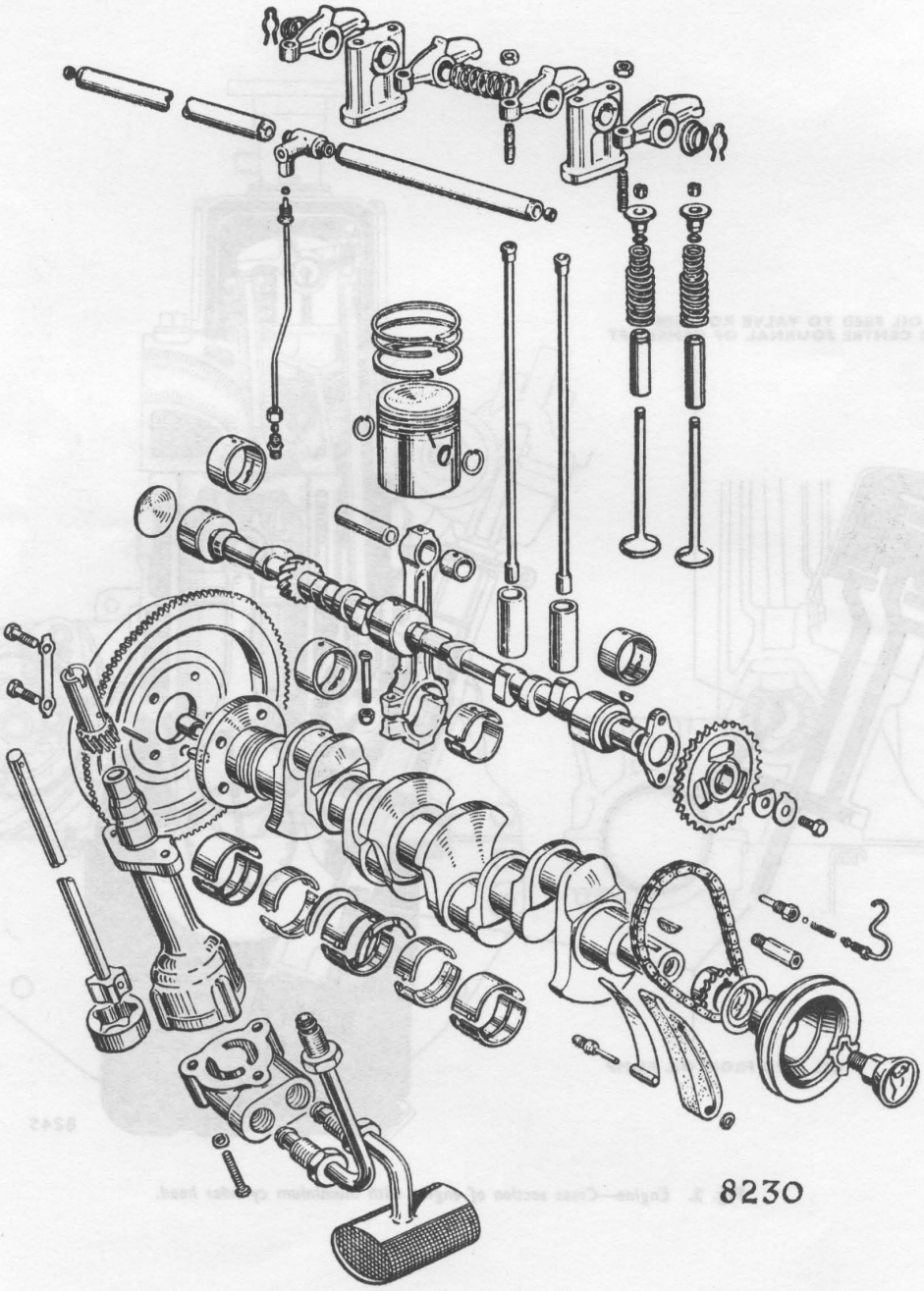

Fig. 3. *Exploded view of working parts—engines with cast-iron cylinder heads.*

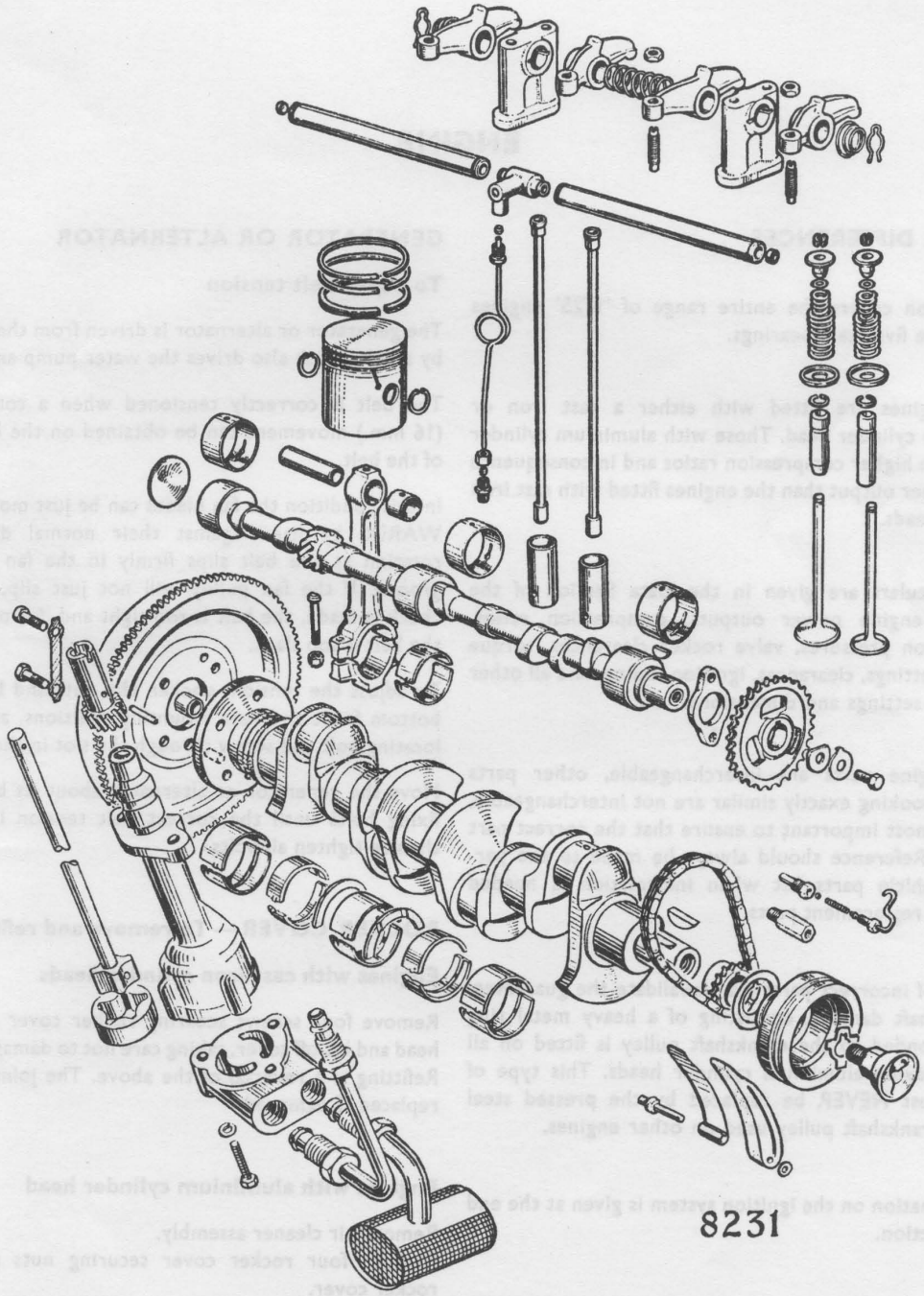

Fig. 4. *Exploded view of working parts—engines with aluminium cylinder heads.*

ENGINE

ENGINE DIFFERENCES

This section covers the entire range of '1725' engines which have five main bearings.

These engines are fitted with either a cast iron or aluminium cylinder head. Those with aluminium cylinder heads have higher compression ratios and in consequence give a higher output than the engines fitted with cast iron cylinder heads.

Full particulars are given in the Data Section of the different engine power outputs, compression ratios, compression pressures, valve rocker clearances, torque spanner settings, clearances, ignition timing, and all other necessary settings and dimensions.

Some engine parts are interchangeable, other parts although looking exactly similar are not interchangeable, and it is most important to ensure that the correct part is fitted. Reference should always be made to the particular vehicle parts list when information is needed regarding replacement parts.

The use of incorrect parts may invalidate the guarantee. A crankshaft damper, consisting of a heavy metal ring rubber bonded to the crankshaft pulley is fitted on all engines having aluminium cylinder heads. This type of pulley must NEVER be replaced by the pressed steel type of crankshaft pulley used on other engines.

All information on the ignition system is given at the end of this section.

A longitudinal section, and cross section of the engine are shown in Figs. 1 and 2. Exploded views of the working parts are shown in Figs. 3 and 4.

GENERATOR OR ALTERNATOR

To adjust belt tension

The generator or alternator is driven from the crankshaft by a belt which also drives the water pump and fan.

The belt is correctly tensioned when a total of $\frac{5}{8}$ in. (16 mm.) movement can be obtained on the longest run of the belt.

In this condition the fan blades can be just moved BACKWARDS by hand against their normal direction of rotation as the belt slips firmly in the fan pulley vee groove. If the fan pulley will not just slip, when this check is made, the belt is too tight and if it moves easily the belt is too slack.

To adjust the tension, slacken the nuts and bolts at the bottom front and rear mounting positions, and the link locating bolt and screw through the slot in the trap.

Move the generator or alternator about its bottom two fixing bolts until the correct belt tension is obtained, then re-tighten all bolts.

ROCKER COVER — To remove and refit

Engines with cast iron cylinder heads

Remove four screws securing rocker cover to cylinder head and lift off cover, taking care not to damage the joint. Refitting is a reversal of the above. The joint should be replaced if damaged.

Engines with aluminium cylinder head

Remove air cleaner assembly.
Remove four rocker cover securing nuts and lift off rocker cover.

Refitting is a reversal of this procedure and a new joint should be fitted.

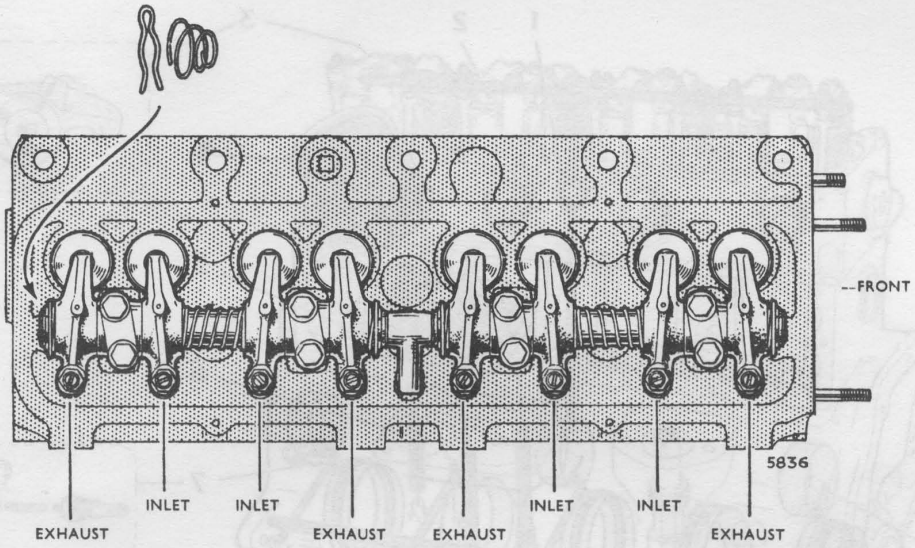

Fig. 5. *Valve rockers—engines with cast-iron cylinder heads.*

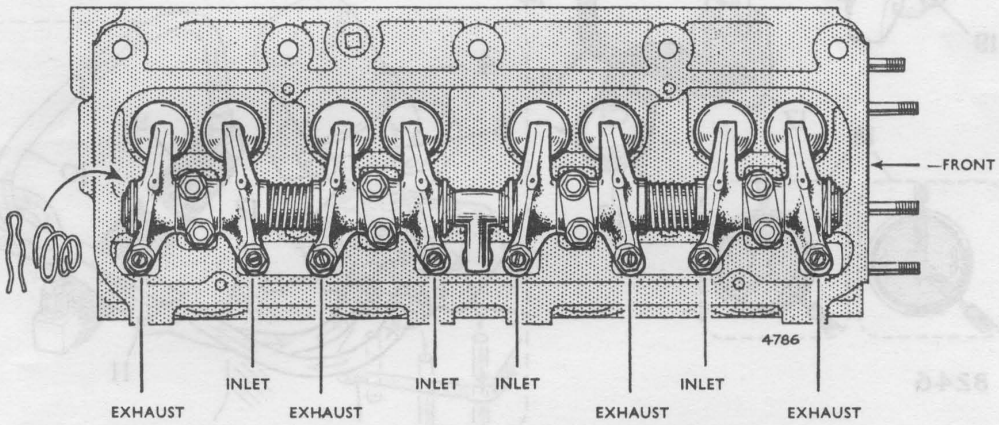

Fig. 6. *Valve rockers—engines with aluminium cylinder heads.*

VALVE ROCKER ADJUSTMENT — all engines

(See Figs. 5 and 6.)

These adjustments are made when the engine is VERY HOT. The valve rocker clearances are given in the Data Section under "Valves."

Remove rocker cover.

Turn the engine until the exhaust valve of No. 4 cylinder is fully open and, starting at this point, adjust valves in the order following, turning the engine progressively through two revolutions to complete the cycle of adjustment.

Adjust No. 1 exhaust with No. 4 exhaust fully open

Adjust No. 2 inlet with No. 3 inlet fully open

Adjust No. 3 exhaust with No. 2 exhaust fully open

Adjust No. 1 inlet with No. 4 inlet fully open

Adjust No. 4 exhaust with No. 1 exhaust fully open

Adjust No. 3 inlet with No. 2 inlet fully open

Adjust No. 2 exhaust with No. 3 exhaust fully open

Adjust No. 4 inlet with No. 1 inlet fully open

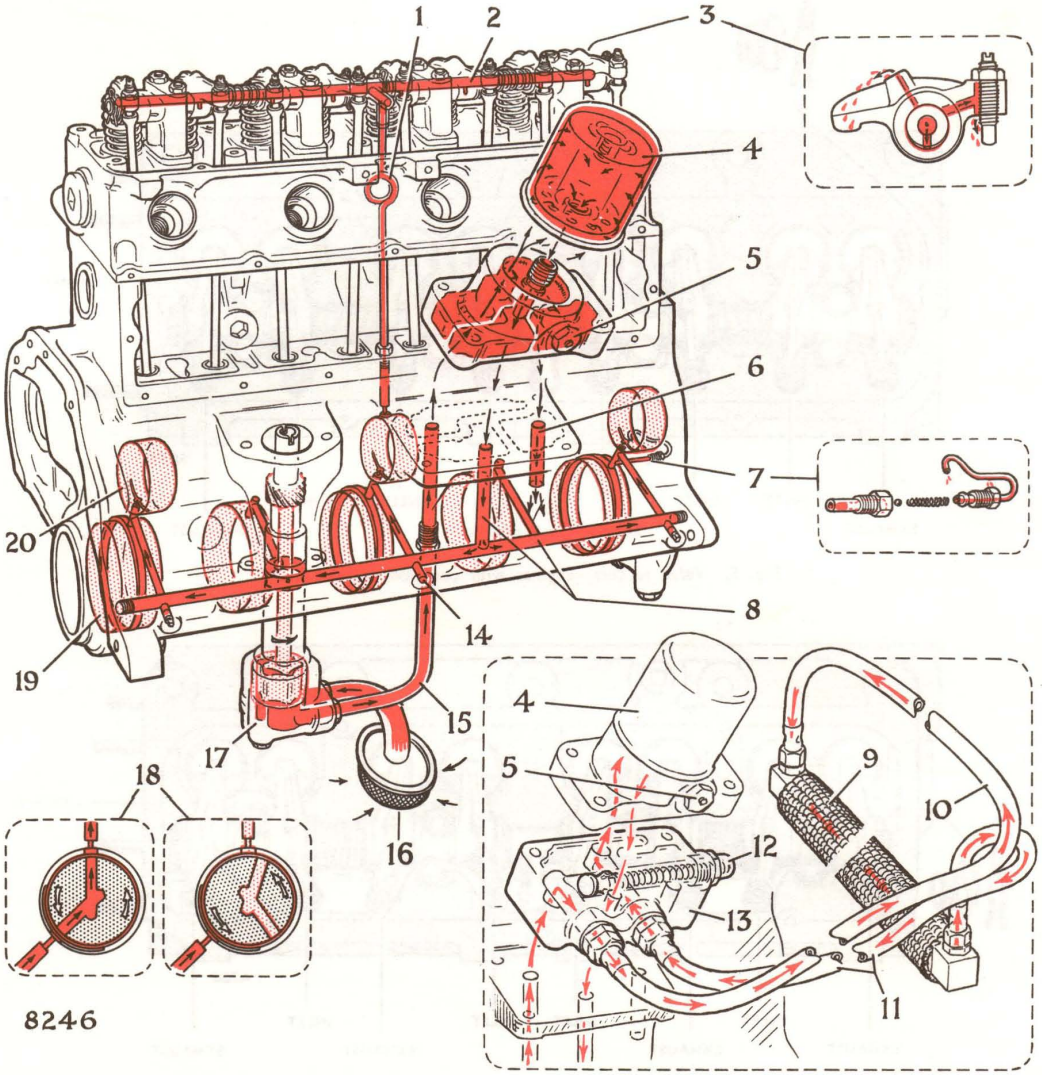

1. OIL FEED PIPE TO VALVE ROCKER SHAFT
2. VALVE ROCKER SHAFT OILWAY
3. VALVE ROCKER OILWAYS
4. FULL FLOW OIL FILTER
5. OIL PRESSURE RELIEF VALVE
6. OIL PRESSURE RELIEF VALVE DISCHARGE HOLE
7. OIL FEED TO TIMING CHAIN FEED PIPE AND NON-RETURN VALVE
8. FEED FROM FULL FLOW OIL FILTER AND OIL GALLERY

*9. OIL COOLER

*10. OIL COOLER FEED PIPE

*11. OIL COOLER RETURN PIPE

*12. OIL COOLER BY-PASS VALVE

*13. ADAPTOR BLOCK—USED BETWEEN OIL FILTER BASE AND CYLINDER BLOCK WHEN OIL COOLER IS FITTED

14. CONNECTION POINT FOR OIL PRESSURE WARNING LIGHT SWITCH OR OIL PRESSURE GAUGE
15. OIL FEED FROM OIL PUMP TO OIL FILTER
16. OIL PUMP INTAKE GAUZE FILTER
17. OIL PUMP
18. CROSS SECTION THROUGH CAMSHAFT CENTRE JOURNAL—SHOWING DRILLING USED TO CONTROL OIL FEED TO ROCKER SHAFT
19. MAIN BEARING
20. CAMSHAFT BEARINGS

*THESE PARTS ARE ONLY USED WHEN AN OIL COOLER IS FITTED

NOT SHOWN—OIL FEED GROOVE, ON OUTSIDE OF PUMP BODY BELOW GEAR. THIS GROOVE FEEDS OIL TO OIL PUMP GEAR.

Fig. 7 *Oil passageways in cylinder block, cylinder head, and oil cooler, if fitted.*

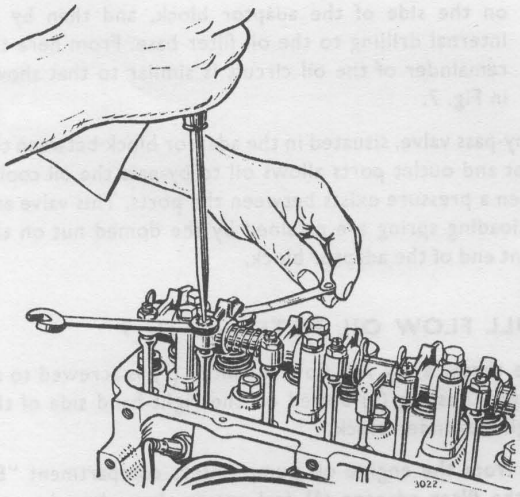

Fig. 8. *Adjusting valve clearances.*

To check clearance, insert a feeler gauge of correct thickness between the valve stem and rocker foot as shown in Fig. 8.

When the rocker clearance is correct the feeler will be firm, but not tight, to move between the rocker and valve stem end, while pushing downwards on the adjustment screw slot with a screwdriver.

To adjust clearance, slacken lock nut and turn screw with screwdriver until correct clearance is obtained. Tighten lock nut and re-check clearance. Check all valves in this manner, then refit rocker cover.

LUBRICATION SYSTEM

General Description

The lubrication system is shown in red in Figs. 1 and 2. Fig. 7 shows the lubricating system and passages in more detail.

Lubrication of all working parts of the engine is effected by the forced feed system, pressure being generated by a submerged oil pump, mounted in the right hand side of the crankcase, and driven, in tandem with the distributor, through skew gears from the camshaft.

Oil is drawn through a submerged gauze filter and rises through the intake tube and oil pump to an internal delivery pipe, whence it is fed to the full flow filter, before passing to the main oil gallery, situated along the right hand side of the crankcase.

From there the oil is distributed into the oilways, drilled in the main bearing support webs of the cylinder block, whence the oil is carried to all main and camshaft bearings. Drilled passages in the crankshaft allow oil to flow from the main bearings to the crankpins, where it lubricates the connecting rod big end bearings.

Oil squirt holes drilled through the big end bearings and connecting rod webs project oil on to the cylinder walls at each revolution of the crankshaft, thus ensuring adequate lubrication of the bores.

The timing gears and chain are lubricated by a jet of oil from a small hole drilled in the side wall of a small diameter pipe which is supplied with oil from the front main bearing oil feed. The oil pipe end passes through a hole in the cylinder block, and oil supplied in excess of the chain's requirements is returned direct to the sump.

The reason for this design is that the diameter of the oil pipe is thus larger than would be possible if it were designed to supply just sufficient oil for the chain's requirements. The advantage of this larger pipe is that blockage is less likely to occur should the oil become contaminated.

The feed end of the timing chain oil feed pipe is connected to a special union, screwed into the drilling (7) shown in Fig. 7. In the union there is a small spring-loaded non-return ball valve which prevents oil draining from the gallery when the engine is stopped. This ensures a very rapid build up of oil pressure directly the engine starts, and oil to flow past the non-return valve as the strength of its return spring is such that it allows the ball valve to lift off its seating whenever the engine is running.

The tappets are lubricated by oil draining back from the valve-operating mechanism.

A pressure relief valve is situated in the forward end of the oil filter body casting. This valve allows a proportion of the circulated oil to return direct to the sump when the pump pressure exceeds the normal pressure given under "Lubrication System" in the Data Section. Fitted into the upper end of the oil filter is a by-pass valve, which opens in the event of the oil filter element becoming choked, thus ensuring a supply of oil to the bearings and other vital parts in such circumstances.

The oil feed to the valve rocker gear is taken from the centre camshaft bearing through a drilling in the centre camshaft journal which acts as a rotary metering device. Oil flow occurs once every camshaft revolution when the

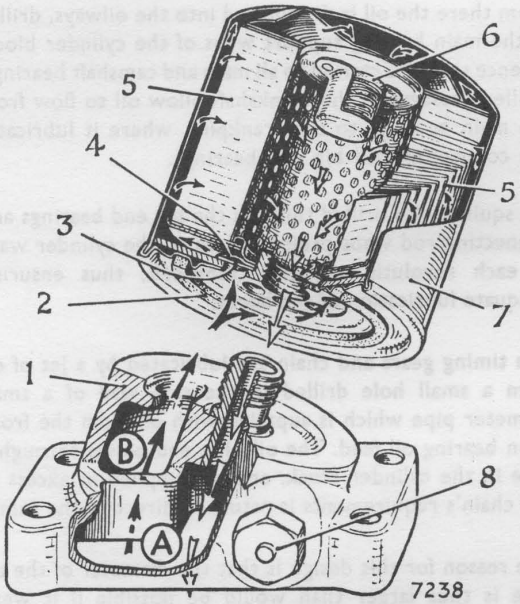

Fig. 9. *Throw away type oil filter—internal details.*

drilling in the camshaft journal connects the centre camshaft bearing oil feed hole, and the oil hole feeding to the valve rocker oil feed pipe. See Fig. 7 and its insert (18). By this means a controlled quantity of oil is fed at a much reduced pressure through an internal pipe to the valve rocker shaft.

Holes in the underside of the rocker shafts feed to each rocker bearing. Grooves in the rocker bearing surface pass oil to drillings in the rockers which feed oil to the push rod cup ends and valve rocker ends that contact the valve stems. Oil from the push rod cup ends overflows and runs down the push rods to lubricate the bottom ends of the push rods in the tappets. Drain holes in each tappet are provided to prevent the tappets from filling with oil.

Oil Cooler—see Fig. 7

If fitted, the oil cooler radiator, is mounted in front of the lower tank of the car radiator, and is connected by two flexible high pressure holes to an adaptor block, bolted between the oil filter base and cylinder block mounting face.

The oil flow to and from the oil cooler is as follows.

1. All oil supplied by the oil pump passes to the rear union on the side of the adaptor block, and to the oil cooler by a flexible high pressure hose.
2. The cooled oil passes from the oil cooler outlet by the other flexible high pressure hose to the front union on the side of the adaptor block, and then by an internal drilling to the oil filter base. From here the remainder of the oil circuit is similar to that shown in Fig. 7.

A by-pass valve, situated in the adaptor block between the inlet and outlet ports allows oil to by-pass the oil cooler when a pressure exists between the ports. This valve and its loading spring are retained by the domed nut on the front end of the adaptor block.

FULL FLOW OIL FILTER—see Fig. 9

The throw away full flow oil filter (7) is screwed to an adaptor casting (1) bolted on the right-hand side of the engine cylinder block.

Oil from the engine oil pump enters compartment "B" in the filter adaptor (1) and passes through eight port holes into the filter body. All oil entering the filter passes through the filter cartridge from the outside to the centre as shown in Fig. 9 and thence through the screwed spigot to compartment "A" in the adaptor casting. From here it enters the engine main oil gallery.

The entry ports on the underside of the filter are shrouded by a flexible anti-drain valve (3) and (4) which prevents the filter from draining during standstill periods.

The throw away filter unit must be changed at the recommended periods given in the "Owner's Handbook".

Oil pressure relief valve — See Fig. 10

A piston type relief valve, situated in compartment "C" in the filter adaptor casting, opens to return all excess oil delivered by the oil pump to compartment "B" when

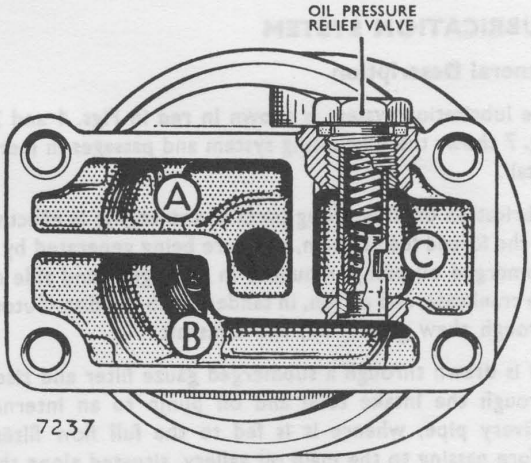

Fig. 10. *Oil pressure relief valve and oil filter base.*

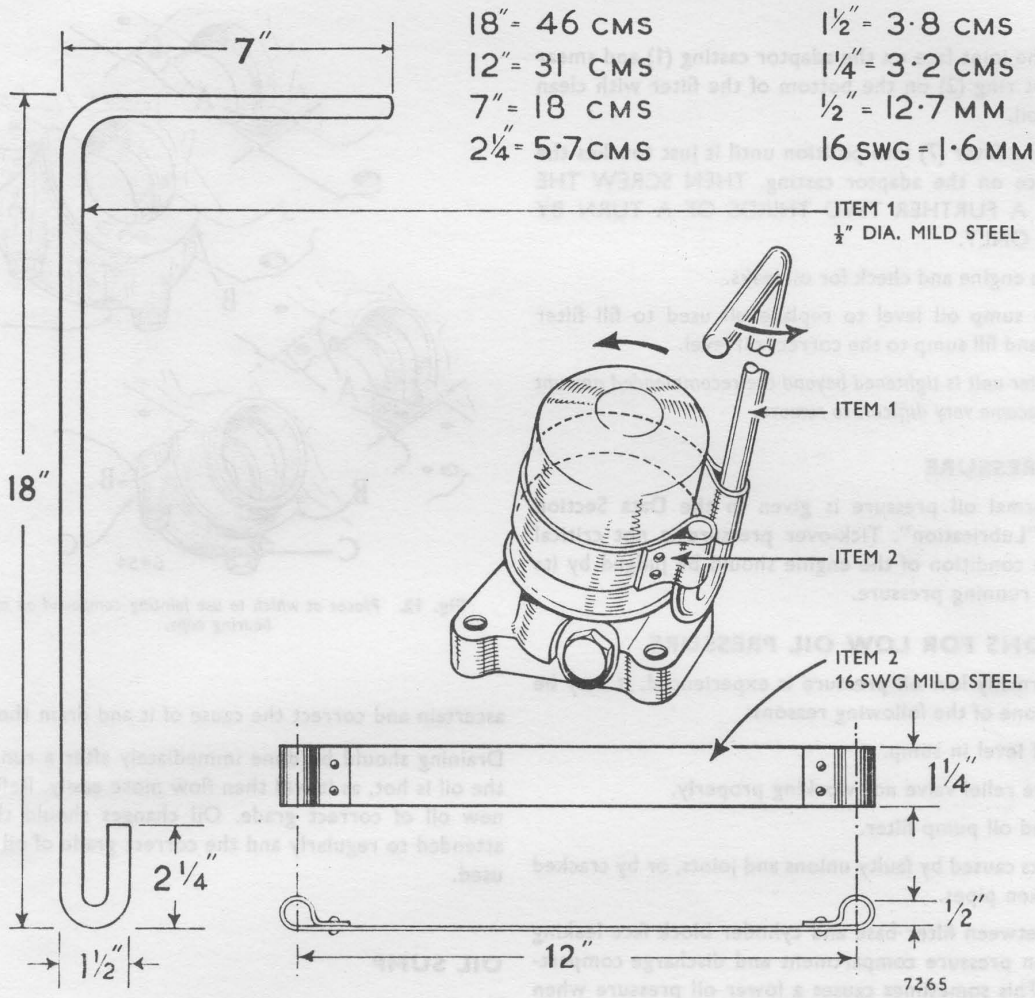

Fig. 11. *Strap wrench—for removing throwaway oil filter.*

the oil pressure exceeds the normal pressure given under "Lubrication" in the Data Section. The excess oil is discharged into compartment "C" from where it drains into the engine sump.

The oil pressure relief valve can be removed as a complete unit with a $\frac{13}{16}$ in. A.F. ring spanner. It is identified by pip on the hexagon head as shown in Fig. 10.

By-pass valve—see Fig. 9

A by-pass valve (6) is fitted inside the throw away filter unit and forms part of this assembly as shown in Fig. 9.

If the filter element (5) becomes choked, through neglect to change the filter assembly at the servicing periods, the by-pass valve (6) opens and allows oil to pass directly to the engine bearings without being restricted by the blocked element (5).

Opening of the by-pass valve (6) can only occur when there is a pressure difference of over 7 lbs. per sq. in. (0·5 kg.sq.cm.) above and below the by-pass valve.

Changing throw away filter unit

To remove—see Figs. 9 & 11

The rubber joint ring (2) on the filter base tends to stick to the adaptor casting (1) joint face, and if the filter cannot be removed by hand it can be unscrewed with a strap wrench, which can be made from the particulars given in Fig. 11.

To fit

Clean the joint face on the adaptor casting (1) and smear the joint ring (2) on the bottom of the filter with clean engine oil.

Screw the filter (7) into position until it just touches the joint face on the adaptor casting. THEN SCREW THE FILTER A FURTHER TWO THIRDS OF A TURN BY HAND ONLY.

Run the engine and check for oil leaks.

Top up sump oil level to replace oil used to fill filter casing, and fill sump to the correct oil level.

If the filter unit is tightened beyond the recommended amount it will become very difficult to remove.

OIL PRESSURE

The normal oil pressure is given in the Data Section under "Lubrication". Tick-over pressure is not critical and the condition of the engine should be judged by its normal running pressure.

REASONS FOR LOW OIL PRESSURE

If abnormally low oil pressure is experienced, it may be due to one of the following reasons:

Low oil level in sump.

Pressure relief valve not working properly.

Chocked oil pump filter.

Oil leaks caused by faulty unions and joints, or by cracked or broken pipes.

Joint between filter base and cylinder block face leaking between pressure compartment and discharge compartment. This sometimes causes a lower oil pressure when the engine is cold.

Timing chain oil feed pipe loose or damaged.

Dilution of oil in sump. (See following paragraphs.)

Worn main and big end bearings.

Worn oil pump components.

OIL DILUTION

Dilution of the lubricating oil may be brought about by the addition of poor quality oil, or by fuel leaking past pistons and rings. The latter condition may be due to worn bores, pistons and rings, and is most likely to occur in cold weather.

Symptoms of crankcase dilution are low oil pressure, rapid wear, overheating, loss of power and emulsification of oil. Emulsification of oil can also be caused by the presence of water due to condensation.

If inspection confirms that dilution has taken place, ascertain and correct the cause of it and drain the sump.

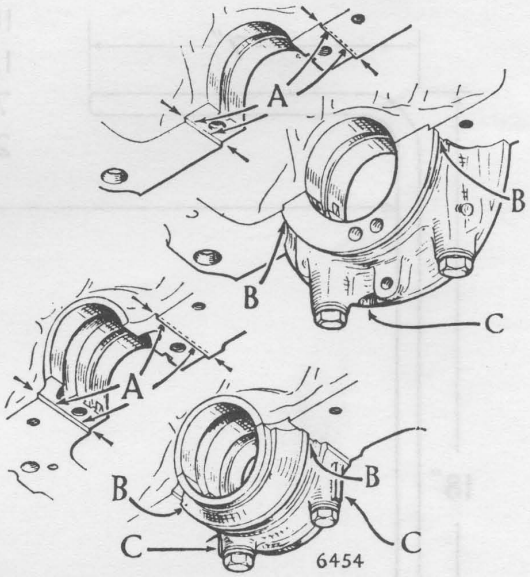

Fig. 12. *Places at which to use jointing compound on main bearing caps.*

Draining should be done immediately after a run, while the oil is hot, as it will then flow more easily. Refill with new oil of correct grade. Oil changes should then be attended to regularly and the correct grade of oil always used.

OIL SUMP

To remove

Drain oil from sump by removing drain plug.

Undo eighteen bolts securing sump to lower face of crankcase. It is advisable to leave one centre bolt on each side in place until the weight of the sump can be taken by hand, to avoid distortion of the joint faces.

To refit

As the sump face is in line with the horizontal axis of the crankshaft main bearings, a semi-circular cork joint is used between the front and rear main bearing caps and the sump, in addition to the normal face joints at each side.

The semi-circular cork joints should be fitted to the front and rear main bearing caps after fitting the cylinder block bottom face joints. All sump joints should be fitted dry except at the two ends of the semi-circular joints where a small quantity of quick setting jointing compound should

be put into the recesses (B) into which the ends of these joints fit. See Fig. 12.

The centre sump bolts should be fitted first and all bolts progressively tightened.

When dealing with difficult cases of oil leakage, the front and rear main bearing caps should be removed and "Wellseal" or other suitable non-setting jointing compound applied along the front and rear main bearing recess vertical locating faces (A) as shown in Fig. 12. On replacing the main bearing caps the jointing compound is trapped in the small corner clearance between the outside edges of the bearing caps and the corner of the locating recess. This prevents oil leakage along the small clearance that must exist at these points and along which oil sometimes leaks.

The identification marks, shown by (c) in Fig. 12 show that THIN semi-circular cork joints of ·150—·160 ins. (3·8—4·0 mm.) are used.

OIL PUMP — See Fig. 13

A four-lobe rotor mounted on the main spindle drives a ring into which are machined five internal lobes. The outer diameter of the ring rotates in the circular bore of the oil pump body, which is offset from the main spindle.

The action of the four-lobe cam on the five-lobe ring creates a strong pumping force by progressively increasing and reducing the clearance between each set of lobes. The pump itself is driven by skew gears from the camshaft.

Intake filter — position

The oil pump filter intake pipe lock nut is tightened so that the filter gauze body is parallel to the cylinder block sump face.

Intake filter — to clean

Whenever the sump is removed the opportunity should be taken to clean this gauze filter.

The gauze should be washed in petrol or paraffin and blown dry with clean compressed air. Do not dry with a fluffy rag.

Provided the recommended lubricating oil is used, and the external full flow filter cleaned at the recommended mileages the oil pump intake filter does not normally need cleaning.

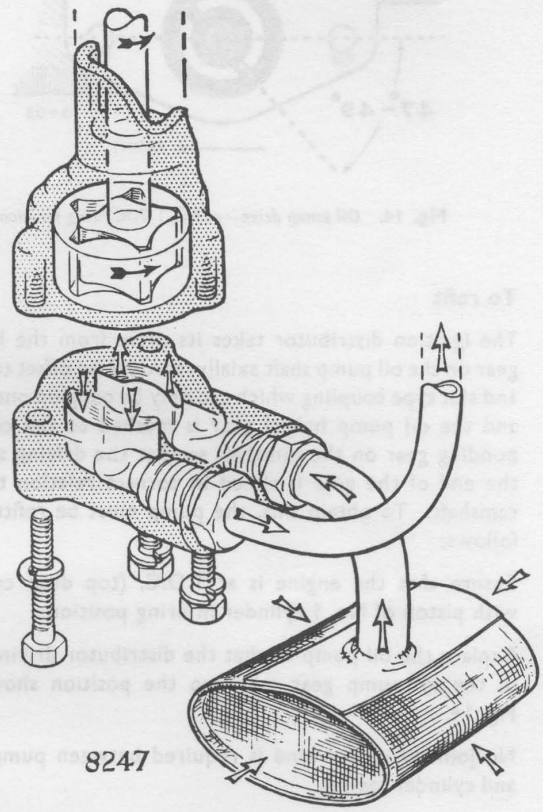

Fig. 13. *Oil pump—internal details.*

To remove

Remove distributor cap, and turn engine until distributor is pointing to No. 1 firing position, and the crankshaft pulley T.D.C. pointer lines up with the timing cover pointer at T.D.C.

Remove distributor.

Remove sump (oil pan).

Disconnect oil delivery pipe from pump and from inside crankcase. Undo two setscrews at oil pump locating flange and remove pump.

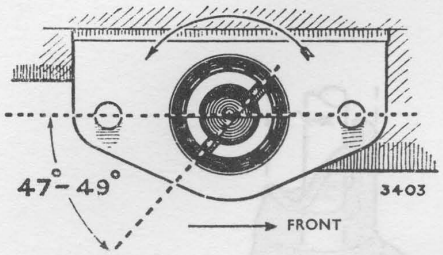

Fig. 14. *Oil pump drive—at No. 1 TDC firing position.*

To refit

The ignition distributor takes its drive from the helical gear on the oil pump shaft axially, through an offset tongue and slot type coupling which can only be coupled one way, and the oil pump helical gear is meshed to the corresponding gear on the camshaft so that the driving slot in the end of the gear is timed in correct relation to the camshaft. To obtain this, the pump must be refitted as follows:

Ensure that the engine is at T.D.C. (top dead centre) with piston of No. 1 cylinder in firing position.

Replace the oil pump so that the distributor driving slot in the oil pump gear takes up the position shown in Fig. 14.

No jointing of any kind is required between pump face and cylinder casting.

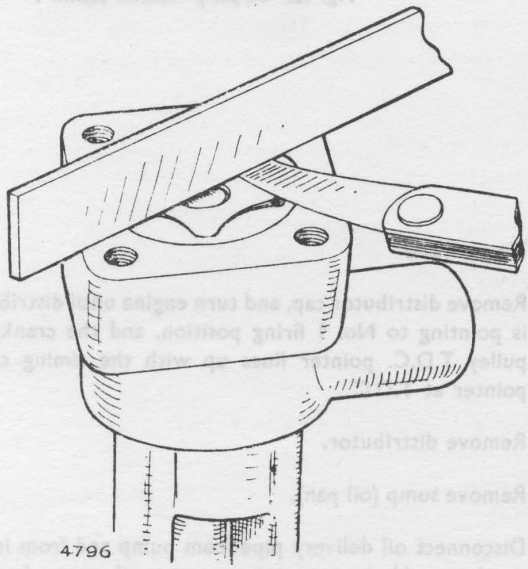

Fig. 15. *Checking oil pump rotor end clearance.*

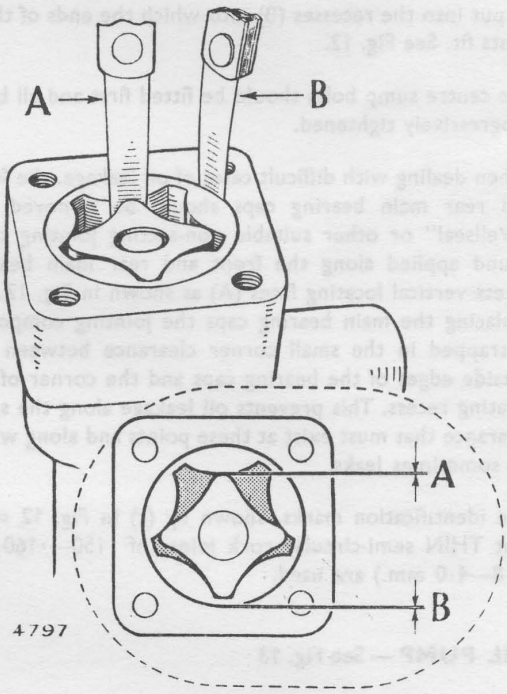

Fig. 16. *Checking oil pump rotor tip and outer rotor clearance.*

Refit sump (oil pan).

Refill with engine oil of specified grade to correct level.

Refit distributor and check ignition timing.

To dismantle, check clearances and overhaul

Invert the pump and remove the four hexagon-headed screws securing the base plate to the pump body.

Lift out the outer rotor ring taking care not to drop it.

IF THIS ITEM IS DROPPED IT CAN EASILY CRACK.

Remove all traces of oil from the inside of the pump body and both rotors. Replace outer rotor.

The following clearances should be checked:

1. End clearance between the inner and outer rotor ring and pump body. The maximum and minimum are ·003 in. (·076 mm.) and ·001 in. (·025 mm.) when measured with a feeler and straight edge as illustrated in Fig. 15.

2. Side clearance between the top of the lobes on the inner and outer rotor as shown on Fig. 16.

   The maximum and minimum clearances "A" are ·006 in. (·152 mm.) and ·001 in. (·025 mm.). New parts should be fitted if the maximum clearance is exceeded.

3. Clearance "B" between the outside of the outer rotor

and pump body must not be greater than ·008 in. (·20 mm.) and not less than ·005 in. (1·27 mm.). Should the clearance found be above the maximum figure a replacement pump should be fitted.

INLET AND EXHAUST MANIFOLDS

Engines with cast iron cylinder heads

To remove

Remove air cleaner.

Disconnect petrol pipe at carburettor.

Disconnect inner choke control cable from its lever on carburettor, outer cable from abutment bracket, throttle, and vacuum advance pipe.

Remove two nuts securing exhaust pipe flange to exhaust manifold. Remove six nuts securing manifold to cylinder head. Remove manifold complete with carburettor.

To dismantle and reassemble

To separate, undo four nuts securing inlet and exhaust branches.

Examine the stainless steel heat deflector. Renew this item if it is defective.

This deflector is marked FRONT and must be fitted as shown in Fig. 17.

To re-assemble, reverse the above procedure and ensure that manifold faces contacting the cylinder head are brought into correct alignment before tightening the four nuts that hold the manifolds together.

Engine with aluminium cylinder head — fitted with Solex Twin Choke Carburettor

To remove

Drain cooling system.

Disconnect coolant feed pipes to and from inlet manifold, vacuum feed pipe to brake servo unit, carburettor controls, fuel feed pipe, and crankcase ventilation pipes at carburettor and inlet manifold connectors.

Remove inlet manifold stays at each end of the inlet manifold.

Remove the three fixing bolts holding inlet manifold to cylinder head and lift off inlet manifold and carburettor. Slacken off alternator support bolts, remove belt from alternator pulley and move alternator over against battery.

Slacken off exhaust pipe clip immediately behind Y junction.

Remove four flange nuts holding the two exhaust pipes to the exhaust manifolds.

Remove four manifold fixing nuts, and manifold clamp bolt. Lift off exhaust manifolds.

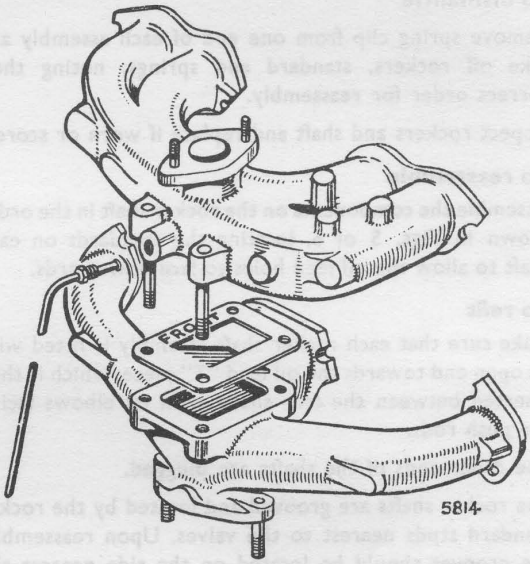

Fig. 17. *Inlet and exhaust manifolds—cast-iron cylinder heads.*

Engines with aluminium cylinder heads — fitted with twin CD Stromberg Carburettors

To remove

Remove the air intake filters from both carburettors.

Disconnect vacuum feed pipe to brake servo unit from the inlet manifold end.

Disconnect carburettor controls, and fuel feed pipe.

Remove the two outer and centre bolt holding inlet manifold to the cylinder head. Lift off inlet manifold complete with carburettors.

Slacken off exhaust pipe clip immediately behind Y junction.

Remove four nuts holding exhaust pipes to exhaust manifolds, four exhaust manifold fixing nuts, manifold clamp bolt and lift off exhaust manifold.

To refit — all engines

This is a reversal of the removal procedure. A new joint should be fitted between the manifolds and cylinder head. The fixing bolts and nuts should be retightened when the engine is hot.

ROCKER SHAFT ASSEMBLIES

To remove

Remove rocker cover. Undo union nut and disconnect oil pipe to rocker shaft.

Remove eight nuts securing the rocker standards to the cylinder head.

Lift out rocker shafts and upper oil feed complete.

To dismantle

Remove spring clip from one end of each assembly and take off rockers, standard and springs, noting their correct order for reassembly.

Inspect rockers and shaft and replace if worn or scored.

To reassemble

Assemble the components on the rocker shaft in the order shown in Figs. 5 or 6, locating the standards on each shaft to allow the oil feed holes to face downwards.

To refit

Make sure that each rocker shaft assembly is fitted with its open end towards the oil feed "T" piece, which is then inserted between the two shafts with its elbows facing the push rods.

The other ends of the shafts are plugged.

The rocker shafts are grooved and located by the rocker standard studs nearest to the valves. Upon reassembly, the grooves should be located on the side nearest the valves.

PUSH RODS

To remove and refit

Remove rocker cover.

Remove rocker shaft assembly.

When removing push rods, keep them in the same order as found and make sure that the tappets are not pulled out of their bores. A sharp tap on the side of the push rod will normally break the oil firm on the ball end.

When push rods have been replaced, reset the valve clearances and recheck clearance when the engine is HOT.

CYLINDER HEADS

Engines are fitted with either a cast iron or an aluminium cylinder head.

The cylinder head bolt retightening procedure for aluminium cylinder heads should be carefully noted and used as it is very important.

Engines must be allowed to cool down before removing the cylinder head.

To remove

Drain cooling system.

Remove air cleaner.

Disconnect radiator top hose.

Remove rocker cover.

Disconnect lead from thermometer transmitter.

Disconnect sparking plug leads.

Remove screws securing tappet cover to cylinder head.

Disconnect oil feed pipe union to rocker shaft.

Disconnect heater pipe (if fitted).

Remove eight bolts holding rocker shaft assembly to cylinder head. These bolts must be released evenly where they are loaded by any compressed valve springs.

Lift off rocker shaft as an assembly holding its two ends so that it cannot fall apart at its centre oil feed brass tee piece.

Remove push rods taking care not to draw the tappets out of the cylinder block. The push rods should be placed in a suitable holder so that they can be replaced in their original positions.

Disconnect fuel feed pipe at its fuel pump end, carburettor end, and its clipped position.

Disconnect carburettor controls.

Remove eight bolts and two nuts securing the cylinder head to the cylinder block.

Disconnect the exhaust pipe(s) at their flange(s) on the exhaust manifold(s).

Lift off cylinder head with manifolds and carburettor still attached.

Cover open end(s) of exhaust pipe(s).

Cylinder head gaskets

All gaskets are stamped with the word TOP and their identifying part number.

They have been varnished and are fitted dry.

Cast iron cylinder heads

A corrugated steel type gasket is used with these cylinder heads.

Aluminium cylinder heads

A copper and steel asbestos type gasket is used.

To refit

Reverse the above procedure. ensuring that all joint faces are clean. Always use a new gasket. Jointing compound should not be used.

It is most important that the cylinder head is aligned so as to correctly position the machined location for the tappet cover in relation to the corresponding machined face on the cylinder block, before tightening the cylinder head bolts.

Do not displace the tappet cover gasket when lowering the head. The cylinder head bolts should be tightened to the torque figure given in the Data Section under

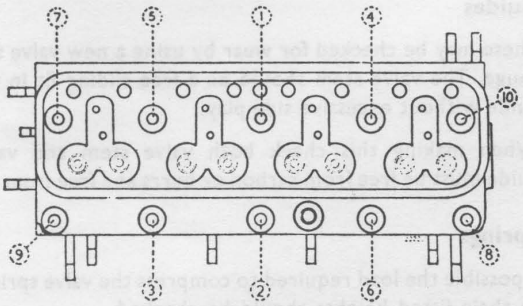

Fig. 18. *Cylinder head bolt tightening sequence.*

"Cylinder Head" in the order shown in Fig. 18 before tightening the tappet side cover screws.

Adjust valve clearances.

It is essential to adhere strictly to the torque wrench figures quoted.

Reset the valve rocker clearances with the engine HOT.

Retightening of cylinder head bolts

The Churchill Special spanner enables this to be done with the rocker gear in position. See Section S.

Cast iron cylinder heads

It is not necessary to retighten the head after the engine is warm, but it must be done on new engines because of the slight stretching of the cylinder head bolts, and studs, during the first 1,000 miles of running.

Aluminium cylinder heads

The following procedure should be used after refitting the cylinder head and fitting a new cylinder head gasket.

1. Run engine until it is thoroughly warmed up.
2. Allow engine to cool down and when COLD retighten the cylinder head.
3. Thoroughly warm up engine and reset the valve clearances.

Method of retightening cylinder head bolts — all engines

When checking cylinder head bolt tightness each cylinder head bolt should be slackened off slightly, and re-tightened to the correct torque one at a time in the order given in Fig. 18. This ensures that each bolt is correctly tightened.

If this is not done some bolts may be so stiff to move that a correctly set torque spanner may not be able to check them if their tightness is just below the correct torque.

COMPRESSION PRESSURES

An engine in good condition should give the compression pressures given in the Data Section under "Engine — General". These pressures should be taken at starter cranking speed with the throttle held fully open, all sparking plugs removed and the engine hot. If readings are obtained substantially below these quoted, the engine concerned is in need of attention to the valves or piston rings, or possibly requires reboring.

DECARBONISING

When the cylinder head has been removed for de-carbonising the complete set of valves should be removed for cleaning, inspection and refacing, (detailed instructions for these operations are given elsewhere in this section). The valve guides should also be checked for wear on their internal diameters and renewed if necessary. See "VALVE GUIDES — TO RENEW".

When removing the carbon from each piston crown, it is always advisable to leave a ring of carbon adjacent to the cylinder bore as this helps to preserve a good seal, and to conserve oil. A convenient method of doing this is to turn the engine until the piston is slightly below the top dead centre position, and insert an old piston ring of correct size in the bore, and press it down on the piston. In this way all the carbon within the old piston ring may be removed, leaving a ring of carbon around the edge.

Place clean rag in the exposed area of the tappet chamber, as no carbon should be allowed to enter.

Remove carbon from the tops of the pistons, the com-bustion chambers in the cylinder head and also from the valve ports. With a suitable scraper clean out the inside of the exhaust manifold.

Remove all loosened carbon, preferably by use of a compressed air line.

Care must be taken when decarbonising the tops of the pistons these being of aluminium alloy. No pointed instrument or emery cloth may be used.

Do not on any account use abrasives for removing carbon, or damage will result.

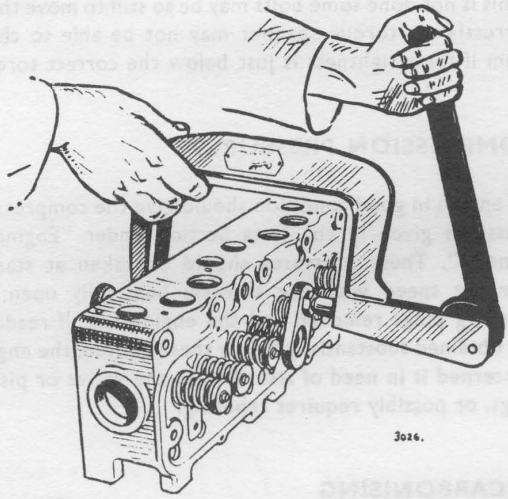

Fig. 19. *Removing valve cotters and springs.*

VALVES

To remove

The Churchill valve spring compressor, shown in Fig. 19, is recommended for this operation. Its reference number is given in Section S of this manual.

Using the valve spring compressor, remove the split coned cotters. When carrying out this operation care should be taken to ensure that no damage is caused to the valve stem by the hardened steel cotters and spring cups.

Release valve spring compressor and lift off cups and dual valve springs.

Remove the valves.

EXAMINATION OF VALVES, SPRINGS AND GUIDES

Valves

Examine for pits on the face, burning and distortion or cracks in the heads. Burnt or cracked valves must always be replaced. See also "Valves — Refacing".

Examine the seatings in the cylinder head, and if defective they should be re-cut. See "Valves seatings — to re-cut". If the valve stems are appreciably worn the valves must be replaced.

Wear of valve stems may be checked by means of a micrometer, and the stem should be checked from various angles and positions, as the stems of valves do not wear evenly. The stem diameter of new valves is given in the Data Section.

Guides

These may be checked for wear by using a new valve as a gauge. The valve stem should be a free sliding fit in the guide without excessive side play.

When making this check both valve stem and valve guide must be free from carbon or burrs and free from oil.

Springs

If possible the load required to compress the valve springs to their fitted heights should be checked.

The required load and length to compress the springs is given in the Data Section under "Valves". The use of a dial type valve spring tester is strongly recommended.

If a spring tester is not available a simple rig as illustrated in Fig. 20 can be made and used. An alternative method is to check the used valve springs by comparing them with new springs. Place them end to end on a long bolt and compress them in a hand press. Any loss will then be apparent as the weaker spring will close up first. If either spring of a pair is weak both inner and outer should be replaced as a pair. Inner and outer valve springs are supplied in new pairs only and should not be interchanged.

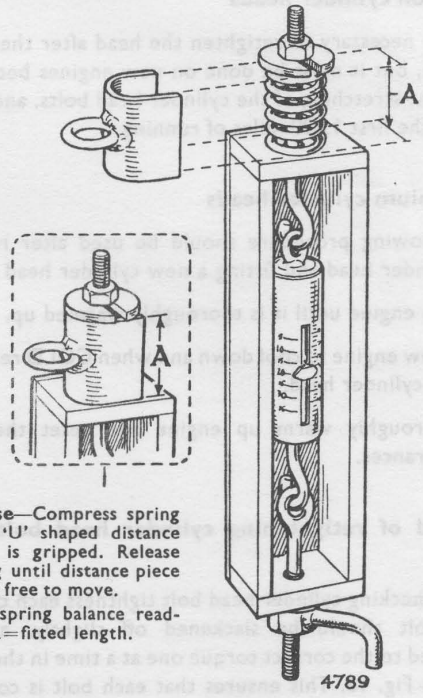

Fig. 20. *Valve spring testing rig.*

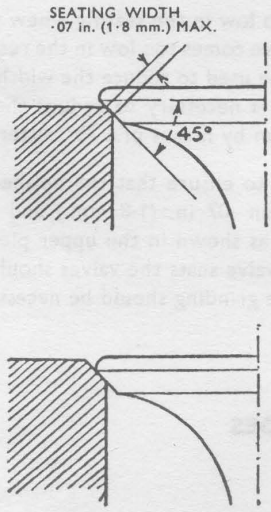

Fig. 21. *Valve seating.*

VALVES

To grind in

This operation will be satisfactory only if the valves and seatings are found to be in good condition after dismantling and examination, and there is no evidence of distortion or burning of the faces and heads of the valves.

It is also necessary after new valves have been fitted, or seastings recut. The valve stems must be free from wear and their guides must be in good condition.

Place a small amount of valve grinding paste (fine) evenly around the face of the valve to be ground, not allowing it to get on the stem of other parts.

Place the valve on its seating and by means of a suction grinding tool, rotate the valve from side to side through a few degrees only, using a light pressure. Frequently raise the valve and move round to a new position on its seating and continue grinding. (On no account should the valve be revolved through complete revolutions when grinding, or rings will be formed on the face with detrimental effects).

The grinding should be continued in this manner until a continuous but narrow seating has been obtained both on the valve and the seating. The seatings should be more than ·070 in. (1·78 mm.) in width. See Fig. 21.

After thoroughly cleaning off all traces of grinding paste from the valve seating with a dry cloth, test by placing a small amount of engineers' marking on the seating and revolving the valve in place not more than about $\frac{1}{8}$ in. (3 mm.) in each direction. A complete circle of marking should appear on both the valve face and seating, indicating a good seal.

VALVES

To refit

The valve stems should be given a thin coating of oil when the valves are refitted.

The valve spring cups have a sealing ring in the lower end. See Fig. 22. When refitting care should be taken to avoid damage to the sealing ring as damaged rings can cause oiling up of the sparking plugs.

The sealing rings should be renewed if faulty.

On some aluminium cylinder heads one steel packing washer is fitted under each valve spring to bring the spring to its correct fitted length. These washers must not be left off of any cylinder head on which they were originally used and must not be fitted to any cylinder head where they are not needed. If doubt exists the fitted height of the valve spring should be checked. This dimension is given in the Data Section under "Valves" as "Valve spring — fitted length".

VALVES

To reface

If, on examination of the valves it appears unlikely that they would clean up satisfactorily with ordinary grinding in, they must be refaced. If the seatings are also in bad

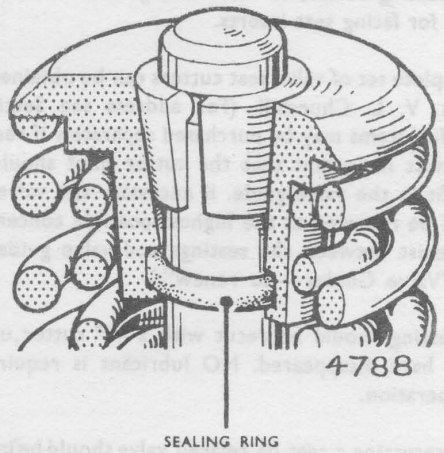

Fig. 22. *Valve spring cap sealing ring.*

condition they must be recut, but generally it will be found that these are better than the valves as regards condition unless the engine has been a very long time in service. It is quite practicable to reface the valves and grind them in on the seatings if the latter are in good order.

It is always better to replace a badly burnt or pitted valve as extended refacing will bring it very low on its seating by reason of the consequent reduction in the effective diameter of the valve face and "pocketing" will result. (See Fig. 21.) This condition is detrimental to the running of the engine and will cause overheating and loss of power. The valve face should be machined only until it is just true and clear of marks, to the standard angle of 45° for inlet and exhaust. These angles are measured from the top of the valve head. Standard dimensions of valves are given in the Data Section at the beginning of this manual.

The refacing of these valves must not leave too thin an edge above the valve head seating. This applies particularly to exhaust valves which must be renewed if much refacing is needed.

A valve which has been refaced as described must also be finally ground in on its seating. (See "Valves — to grind in".) The seating must be in good condition and the face not more than ·070 in. (1·78 mm.) in width.

VALVE SEATINGS

To recut

A damaged or slightly burnt seating may be refaced with a 45° seating cutter, or valve seat grinder. The latter is better for facing seat inserts.

A complete set of valve seat cutters can be obtained from Messrs. V. L. Churchill. (For address see Section S.) Individual items may be purchased separately if required. It is most important that the cutter pilot should be a good fit in the valve guide. If necessary the valve guide should be renewed as the highest possible concentricity must exist between the seatings and valve guide bore. (See "Valve Guides — to renew".)

The seating should be recut with a 45° cutter until all marks have disappeared. NO lubricant is required for this operation.

After recutting a seat its refaced valve should be inserted in the valve guide to check where the valve seats. If the valve comes too low in the seating a new valve should be tried. If this valve comes too low in the recut seating a 15° cutter should be used to reduce the width of the seating. Occasionally it is necessary to reduce the seating width from the bottom by means of a 75° cutter.

It is important to ensure that the finished seat width is not greater than ·07 in. (1·8 mm.) and that the valve seats correctly as shown in the upper picture in Fig. 21. After refacing valve seats the valves should be ground in and only a little grinding should be necessary to produce a good seating.

VALVE GUIDES

To renew

Engines with cast iron cylinder heads

The valve guides are driven out of the cylinder head from their valve spring end. It is not advisable to drive from the valve port end because the guide ends become brittle under the heat to which these ends are exposed.

New valve guides must have the prescribed interference fit in the cylinder head given in the Data Section under "Valves". Oversize valve guides are available.

The guides should be driven into the cylinder head, from their upper end, until they project by the amount given in the Data Section, under "Valves" — valve guide fitted height above head.

The valve guides must be fitted to their respective ports. Inlet valve guides are shorter than the exhaust valve guides. Both guides have a circular groove around their upper ends.

The valve guides can be driven out, and driven in with the Churchill valve guide remover/replacer. See Section S. After fitting the valve guides should be reamed with a spiral fluted reamer to give a guide bore diameter of ·3125-·3135 in. (7·94-7·96 mm.).

Engines with aluminium cylinder heads

Valve guides can only be fitted and renewed with the Churchill valve guide remover/replacer when the cylinder head has been uniformly heated to a temperature of 200°C (390°F).

A suitable size gas or electric cooking stove fitted with a Rototherm or other type of thermometer in the oven door can be used for heating the cylinder head. The oven temperature should be maintained at 200°C. (390°F) while

the cylinder head is left in the oven for about 30 minutes.

A circlip is fitted to both inlet and exhaust valve guides and ensures that the guides are correctly fitted when the circlips come against the cylinder head.

Both valve guides are chamfered on the top ends. The inlet valve guide has a long chamfer at the valve port end and is slightly shorter in length than the exhaust valve guide.

A stand is needed for the cylinder head after it is heated. This consists of a piece of thick hardwood covered on one side with soft asbestos sheet to prevent damage to the cylinder head face. Eight holes should be cut through the board to give ample clearance around the valve guides, when the cylinder head is resting on its top face, to allow the valve guides to be driven out from the valve head ends. As an additional means of retaining heat a fairly close-fitting four-sided wood box, lined with asbestos can be placed around the cylinder head after it has been put on the bottom support board. This will leave only one face exposed.

The valve guides can be driven out with a suitably stepped mild steel drift provided that the cylinder head is heated to the proper temperature. THEY CANNOT BE DRIVEN OUT OF A COLD CYLINDER HEAD.

New valve guides must have a proper interference fit and can only be installed when the cylinder head has been heated to the proper fitting temperature. This usually requires the fitting of guides having an outside diameter of ·001 in. (·025 mm.) larger than the guides that are removed. The correct intereference for these valve guides is given in the Data Section under "Valves".

The valve guide depth positioning circlips should be fitted to the valve guides before driving the valve guides into the cylinder head.

The sharp edge of the top end of the valve guide must not be damaged as this edge is used to scrape excess oil from the valve stem.

After fitting, the valve guides should be reamed with a spiral fluted reamer, to give a valve guide bore diameter of ·3125-·3135 ins. (7·94-7·96 mm.).

EXHAUST VALVE SEAT INSERTS

Engines with cast iron cylinder heads

Exhaust valve seat inserts are not normally fitted to new engines but inserts are available for service use in four sizes, standard +·002 in. (·050 mm.) +·005 in. (·127 mm.) and +·010 in. (·254 mm.).

When inserts have to be used new valve guides should be fitted and the cylinder head recessed deep enough to take the insert to a diameter that will give the insert an intereference fit of ·0025 in. (·063 mm.) to ·0045 in. (·114 mm.). The insert must be pressed in perfectly square until it seats on the entire bottom face of the recess.

The valve seat, on the newly fitted insert, should be cut at an angle of 45° to a width of ·05 in.-·06 in. (1·27 mm.-1·52 mm.) and must be concentric to within ·001 in. (·025 mm.) of the valve guide bore.

EXHAUST AND INLET VALVE SEAT INSERTS

Engines with aluminium cylinder heads

These inserts can only be fitted when the cylinder head has been uniformly heated to 200°C (390°F). The equipment previously described under "VALVE GUIDES — To renew", should be used.

Inserts cannot be extracted from a cold cylinder head as they are fitted ·010 in. to ·032 in. (·25 mm. to ·81 mm.) below the combustion chamber face which shrinks in above the inserts.

To remove

Old inserts can be removed by boring out until the insert collapses. The machine depth stop should be set so that boring cannot continue beyond the bottom face of the insert recess in the cylinder head.

To replace

1. Check the valve seat recess diameter.

2. Select a suitable oversize valve seat insert and check its outside diameter.

3. Machine the cylinder head recess diameter to the best possible finish concentric to the valve guide centre so that the insert will have the correct interference fit of ·0025 in.-·0045 in. (·063-·114 mm.).

4. Heat the cylinder head for 30 minutes from cold in an oven maintained at a temperature of 200°C (390°F).

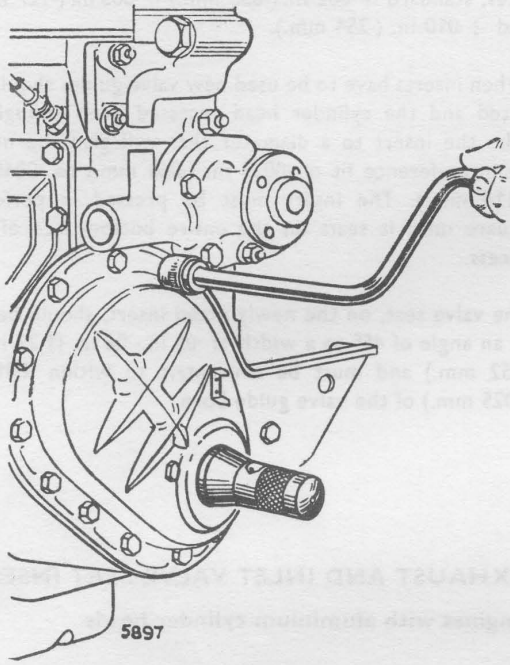

Fig. 23. *Centralising timing cover.*

5. Fit the insert ensuring that it beds on the bottom face of its recess.

6. The valve seat on the newly fitted insert should be cut or ground at an angle of 45° to a width of ·05 in.-·06 in. (1·27 mm.-1·52 mm.). The seat must be concentric to within ·001 in. (·025 mm.) of the valve guide bore.

7. After replacing an inlet valve seat the inner bore of the insert must be carefully enlarged to blend with the inlet port immediately behind the valve seat.

TAPPETS

To remove and refit

Remove rocker cover, rocker shaft assemblies, and push rods.

Remove engine side cover, as follows:

Remove the oil filter. Remove distributor. Take out screws securing side cover and remove cover.

Lift out tappets. Tappets should be numbered in pencil on removal so that they can be replaced in their original positions.

Tappet faces in contact with the cams should be free from pitting and wear. Regrinding of the tappet faces is not recommended as it reduces the thickness of the hardened face.

Refitting is a straightforward reversal of the above procedure. Note that the tappets should be replaced in the bores from which they were removed.

TIMING COVER AND TIMING CHAIN TENSIONER

To remove

Drain and remove radiator.

Slacken the generator or alternator mounting screws and remove fan belt.

Unscrew crankshaft jaw nut with Churchill starting dog nut spanner and pull off crankshaft pulley.

Remove all screws and nuts holding cover in position, and withdraw cover. This will allow tensioner to come off the timing chain and to hang on its pivot.

Remove tensioner if necessary.

To refit

Reverse the above operations. In replacing the cover, the timing chain tensioner will again rest against the timing case side and correctly tension the timing chain. It is very important to centralise the cover around the crankshaft pulley before fully tightening the bolts. The timing cover centralising tool obtainable from Messrs. V. L. Churchill, should be used as shown in Fig. 23. (See Section S.)

TIMING WHEELS AND CHAIN

To remove

Remove timing cover.

Remove split pin and plain washer from tensioner pivot pin and lift off tensioner blade.

Remove the setscrew, tab washer, and plain washer from front end of camshaft.

Remove oil thrower in front of crankshaft sprocket. Pull or lever off both camshaft and crankshaft wheels simultaneously. A Churchill puller, is used for withdrawing the crankshaft sprocket. See Section S.

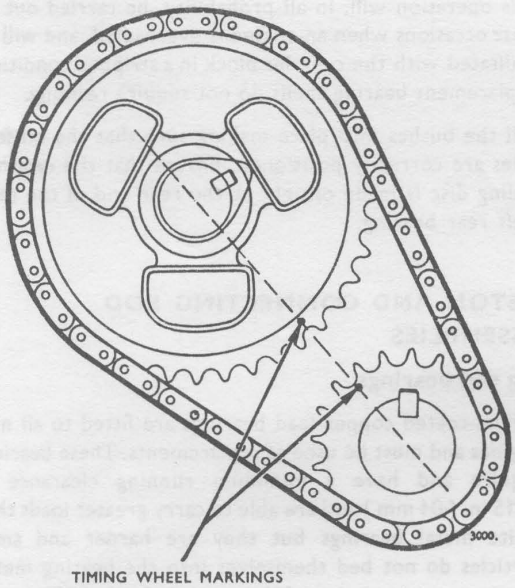

Fig. 24. *Position of timing wheel marking when replacing timing chain.*

To refit

When refitting, set Nos. 1 and 4 pistons to T.D.C. so that the key is to the top of the crankshaft.

Push crankshaft wheel onto crankshaft until it is approximately 1·5 in. (38 mm.) from the shaft shoulder.

To obtain the correct valve timing, fit chain to crankshaft wheel and camshaft wheel so that the dots on the camshaft and crankshaft wheels are in line. (See Fig. 24.)

Turn camshaft until the key lines up with the key way in the camshaft wheel.

Pull camshaft wheel onto camshaft by means of a washer and bolt screwed into the camshaft end, and drive crankshaft wheel onto crankshaft.

THE CAMSHAFT SPROCKET MUST NOT BE DRIVEN ONTO THE CAMSHAFT BECAUSE THIS CAN FORCE THE CAMSHAFT BACKWARDS AND DISPLACE THE SEALING DISC AT THE OUTER REAR END OF THE REAR CAMSHAFT BEARING. SEE FIG. 1.

Replace camshaft sprocket fixing bolt and washer.

Secure bolt with a new lock washer.

Replace crankshaft oil thrower.

Refit chain tensioner and timing cover, making sure that the tensioner blade is correctly fitted.

The front face of the timing case is bolted to a pedestal bolt, and the free end of the tensioner rests on the inside of the timing case.

Camshaft sprockets used on these engines have a small circular groove machine on the rear face just below the bottom of the sprocket teeth.

Valve timing — to check timing chain replacement

This is only necessary when incorrect replacement of the timing chain is suspected, in which case the following quick check can be made.

1. Remove rocker cover and adjust No. 1 cylinder inlet valve rocker clearance to ·019-·020 in. (·48-·50 mm.) when No. 4 cylinder inlet valve is fully open. This is important as valve timing cannot be checked at the normal valve rocker clearances.
2. Turn engine until the pointer on the crankshaft pulley gives a position of about 60° B.T.D.C.
3. Set up a clock gauge to show when No. 1 inlet valve begins to move. To do this the gauge stylus point must contact the valve spring cap. Set the gauge dial to read zero and turn the engine slowly until the gauge shows ·001 in. (·025 mm.) downward movement of the valve spring cap. Note the position of the crankshaft pulley pointers or markings. They should show approximately 19° B.T.D.C. for engines with cast iron cylinder heads and 29° B.T.D.C. for engines with aluminium cylinder heads on the crankshaft pulley.

   If the valve timing is one tooth out, the correct mark on the crankshaft pulley will be a considerably greater distance before T.D.C. or at or near T.D.C.

   The valve opening point can also be found with reasonable accuracy by attempting to rotate the valve spring cap with the first finger and thumb. Directly the valve leaves its seat it is possible to slightly twist the valve and this movement will be seen on the spring coils. The actual opening point of a valve cannot be determined by noting when a thin feeler is gripped between the rocker and valve stem end or by rotating the push rod to find when load comes onto the push rod.
4. Readjust No. 1 cylinder inlet valve to its normal clearance.

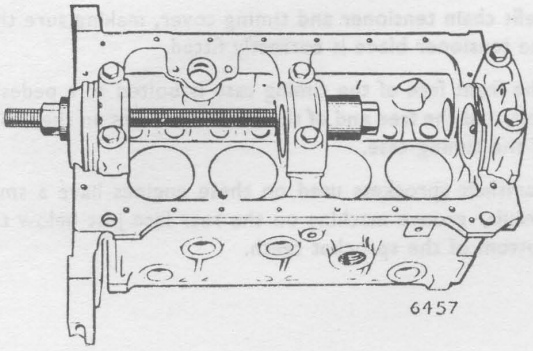

Fig. 25. *Removing camshaft bearing bushes*

CAMSHAFT

Differences

The camshafts used on this range of engines are not interchangeable because of the different valve opening periods and different positions of the cams.

To remove and refit

Disconnect electrical leads and remove distributor.

Drain and remove sump and oil pump.

Remove tappets and fuel pump.

Remove radiator.

Remove timing cover, crankshaft oil thrower, and timing wheels and chain.

Remove two setscrews and take off camshaft thrust plate and withdraw camshaft gently to avoid damage to bearings.

Refitting is a reversal of this procedure, correctly timing camshaft and replacing oil pump as explained under "Oil pump".

Endfloat

After replacing the timing wheels, the camshaft end float should be checked with a clock gauge. The end float must not exceed ·002-·003 in. (·050-·076 mm.). Oversize thrust plates are available for fitting if required.

CAMSHAFT BEARINGS

To renew

Using a suitable withdrawal tool, as shown in Fig. 25, the front and end and centre bearing can be withdrawn forwards.

The gearbox, clutch and flywheel, together with rear sealing disc, will have to be removed to enable rear bearing to be withdrawn rearwards.

This operation will, in all probability, be carried out on most occasions when an engine is overhauled, and will be facilitated with the cylinder block in a stripped condition. Replacement bearing shells do not require reaming.

Pull the bushes into place making sure that the oil feed holes are correctly positioned. Ensure that the camshaft sealing disc is made oiltight at the rear end of the camshaft rear bearing.

PISTON AND CONNECTING ROD ASSEMBLIES

Big end bearings

Indium-coated copper lead bearings are fitted to all new engines and must be used as replacements. These bearings require and have a minimum running clearance of ·0015 in. (·04 mm.) and are able to carry greater loads than white metal bearings but they are harder and small particles do not bed themselves into the bearing metal. In consequence scoring of the crankshaft big end journals will occur if abrasive particles reach the bearings. Regular oil changing and renewal of the filter element at the recommended mileages are therefore most important.

To renew

If necessary, the big end bearings can be renewed, after removing the sump provided that crankshaft big end journals are not scored or worn.

Pistons

Most engines are fitted with high compression pistons, but in some export territories engines are fitted with low compression pistons to meet the requirements of lower octane fuels.

High, and low compression pistons are identified by the particular letter stamped on the piston crown. Details of these letters are given in the Data Section under "Pistons".

Fitting clearances are the same for all pistons.

Pistons and connecting rods — to remove

Remove cylinder head.

Remove sump.

Remove the self-locking nuts securing big end bearing caps.

Remove connecting rod caps with bottom half big end bearings. No identifying numbers are stamped on either the connecting rod or connecting rod cap.

Push pistons up the cylinder bores and withdraw assemblies from above.

If the original parts are to be used again it is essential that the big end caps are reassembled to the same rods from which they were removed. To show correct assembly, a forging flash is left on the oil squirt hole side of the connecting rod. This flash lines up with a similar flash on the connecting rod cap. Each complete connecting rod should be refitted to the same piston and cylinder bore from which it was removed.

Pistons and connecting rods — to refit

When the rods are fitted, the oil squirt holes, drilled through the small projections immediately above the big ends, must face towards the right hand (thrust) side of the cylinder walls, with the engine viewed from the rear.

Check that the pistons and connecting rods are correctly assembled, then insert connecting rods and pistons into cylinder bores from above in the opposite manner to that detailed for removal.

To facilitate insertion of the pistons in the cylinders and to prevent piston ring breakage, a piston ring compressor should be used.

The scraping edge of the slotted oil control rings are easily broken if an improvised ring compressor is used.

The Churchill piston ring compressor should be used. See Section S.

Tighten nuts to the correct torque given in the Data Section under "Connecting Rod".

These nuts are $\frac{11}{32}$ in. x 24 T.P.I. UNF. Care is needed to ensure that $\frac{3}{8}$ in. x 24 T.P.I. UNF nuts, used on other Rootes engines, are not fitted when replacement nuts are required. As the larger $\frac{3}{8}$ in. nuts have the same number of threads per inch they can easily be screwed onto the $\frac{11}{32}$ in. x 24 T.P.I. big end bolt thread and will strip the threads when tightened to about 12 lbs. ft. torque (1·5 kgm.).

The self-locking nuts must not be used again if they can be screwed on with the fingers.

Gudgeon pin — to remove

Remove circlips retaining gudgeon pin in piston with circlip pliers. Scrape away any carbon which may have accumulated in the outer ends of the piston bosses to facilitate removal of the gudgeon pin.

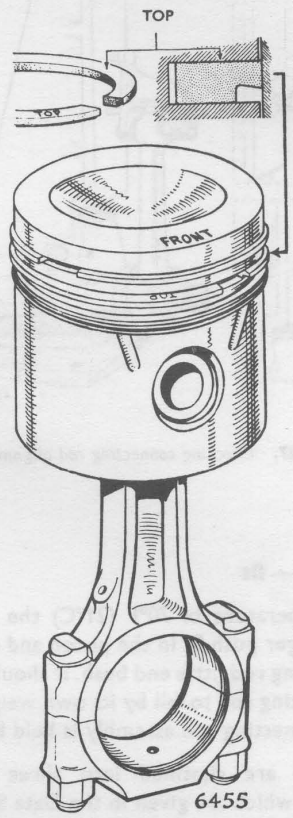

Fig. 26. *Piston correctly assembled to connecting rod.*

Warm the assemblies, preferably in oil, and push out the gudgeon pins. Tight fitting gudgeon pins should not be driven out of cold pistons.

Gudgeon pin — to refit

The fit of the gudgeon pin in the piston bosses and small end bush is critical.

The original piston gudgeon pin and small end bush may be used again, in this respect, only if the gudgeon pin is without shake, both in the piston bosses and in the small end bush.

The gudgeon pin retaining circlips should be renewed.

The correct way of assembling the piston on the connecting rod is shown in Fig. 26.

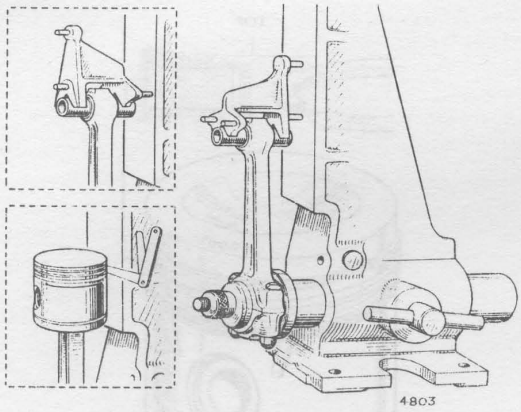

Fig. 27. *Checking connecting rod alignment.*

Gudgeon pin — fit

At room temperature of 70°F (21°C) the gudgeon pin should be a finger push fit in the piston and only just free in the connecting rod little end bush. It should be possible for the connecting rod to fall by its own weight when the piston and connecting rod assembly is held horizontal.

Gudgeon pins are classified into three grades, the dimensions, of which are given in the Data Section under "Gudgeon Pins".

·003 in. (·076 mm.) oversize gudgeon pins are available for service use.

Honing is recommended for finishing a new little end bush to size, or for enlarging this bush and the piston bosses to take ·003 in. (·076 mm.) oversize gudgeon pins. The Delapena precision honing machine is recommended for this operation. This machine may be obtained from Delapena and Sons Ltd., Zona Works, Cheltenham, England, together with the necessary honing stones, honing fluid and instruction booklet.

Connecting rod alignment — See Fig. 27

After fitting and honing, or reaming a new connecting rod little end bush to size, the connecting rod alignment should be checked. The Churchill alignment jig, for connecting rods, with the adaptors for this engine should be used. See Section S. Connecting rod alignment should also be checked when rubbing marking on the front and rear faces of the piston is not even around the piston skirt. Connecting rods can be straightened in a large bench vice using special vice jaws.

PISTON RINGS

Top compression ring

This piston ring is chromium plated with the word "Vacrom" etched on one of its side faces. It may be fitted either way up and is Cargraph treated to assist bedding in. This treatment leaves it a dull grey and faintly red colour.

Second compression ring — See Fig. 26

To provide more rapid running in and also to assist in oil control, a stepped periphery compression ring is fitted in the second groove from the top of both standard and oversize pistons. It is most important that this ring is correctly fitted with the step downwards, that is, with the widest face toward the top of the piston. This face is marked "TOP" to indicate that it should be fitted uppermost. Incorrect fitting will result in higher oil consumption.

Scraper ring

One slotted type scraper ring is fitted in the third groove. Care is needed when fitting these rings as the scraping edges are easily broken.

Top chromium plated piston rings

Where the need arises to fit new chromium rings to polished (part worn) bores, it will be necessary first to remove the glaze from the bores as otherwise these rings may never bed down properly.

The procedure to be adopted in such cases is as follows:

1. Mask off the bottom of the cylinders to prevent any abrasive matter reaching the crankshaft or crankcase.
2. Make up a wooden dummy piston which will fit snugly into the bore with a piece of No. 1 or 1½ grade emery paper wrapped round it.
3. This dummy piston, with the emery cloth round it, should then be inserted into each cylinder in turn and moved up and down the bore for about 3 minutes (each cylinder) at the same time rotating it first one way and then the other until the entire cylinder wall is covered with criss-crossed abrasions.
4. Wash down the bores thoroughly and dry them out ensuring that no foreign matter finds its way into the crankcase.

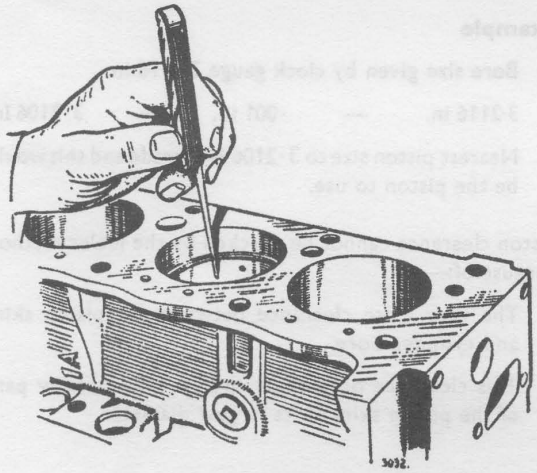

Fig. 28. *Checking piston ring gaps*

A very useful glaze remover can be obtained from:

Hepworth and Grandage Ltd.,
St. Johns Works,
Bradford 4,
ENGLAND

This tool gives very satisfactory results if operated by hand or at very low speeds, but it should not be used at any higher speed.

To fit

The correct ring gaps are given in the Data Section. These figures are easily obtained in grade A, B, C and D cylinder bores, but slightly larger gaps are sometimes obtained when checking piston rings in cylinder bores that can take grade E pistons. Fit the rings first to the cylinder bore and check the ring gap with a feeler gauge. (See Fig. 28.)

With a feeler gauge check for correct vertical clearance of the rings in the grooves, which should be ·0015-·0035 in. (0·04 -·19 mm.) for both compression and scraper rings. (See Fig. 29.)

Fit the rings to the pistons in such a way that the ring gaps are equally spaced out round the piston, and not in line with one another, making sure that the rings are checked at No. 1 cylinder are fitted to No. 1 piston and so on.

EXPLANATION OF PISTON AND CYLINDER BORE GRADING LETTERS

The pistons and cylinder bores are graded into the diameters given in the Data Section under "Engine General" and "Pistons".

The variation between each grade letter diameter is ·0004 in. (·010 mm.) and the total difference between the highest and lowest cylinder bore limits, in which there are four grades is ·0016 in. (·040 mm.). By means of the grading system the correct piston fit is obtained when pistons are fitted to new cylinder bores having similar grade letters as the pistons. The diameter difference between similar grade letters for the cylinder block and piston is the required clearance for the piston.

Example

Cylinder bore grade 'A'		Piston grade 'A'		Piston clearance
3·2106 in.	—	3·2092 in.	=	·0014 in.
(81·549 mm.)	—	(81·514 mm.)	=	(·036 mm.)
3·2102 in.	—	3·2096 in.	=	·0006 in.
(81·539 mm.)	—	(81·524 mm.)	=	(·015 mm.)
Mean piston clearance is therefore				·001 in.
				(·025 mm.)

The cylinder grade letters are stamped on two machined bosses at each end of the cylinder block below the level of the cylinder head on the exhaust manifold side, and visible with the cylinder head in place. The piston grade is stamped on the top face of each piston. (See Fig. 30.)

Grade letter diameters are given in the Data Section under "General" and "Pistons".

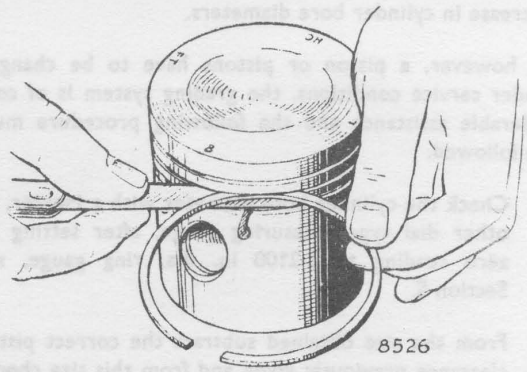

Fig. 29. *Checking piston ring side clearance.*

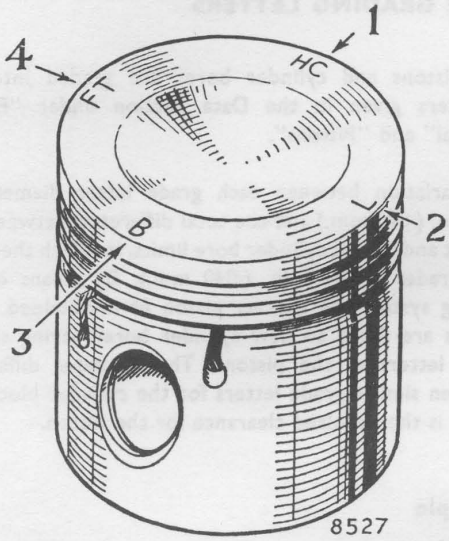

Fig. 30. *Example of piston crown markings.*

Piston crown markings See Fig. 30.

1. HC or LC	–	COMPRESSION RATIO INDICATION. HC, HIGH COMPRESSION PISTON, LC, LOW COMPRESSION PISTON.
2. L, M or H.	–	GUDGEON PIN BORE DIAMETER GRADING LETTER L, LOW—M, MEDIUM—H, HIGH.
3. B or A, C, D or E	–	PISTON DIAMETER GRADING LETTER.
4. FT.	–	FRONT—MARK SHOWING FITTING POSITION IN ENGINE.

FITTING NEW PISTONS

After a new engine has been run for a few hundred miles the cylinder grade letter sizes no longer apply because the running in process will result in a slight initial increase in cylinder bore diameters.

If, however, a piston or pistons have to be changed under service conditions, the grading system is of considerable assistance and the following procedure must be followed.

1. Check the cylinder bore diameter with a Mercer, or other dial type measuring gauge, after setting its zero reading to 3·2100 in. dia. ring gauge, see Section S.

2. From the size obtained subtract the correct piston clearance previously given and from this size choose a suitable grade of piston.

Example

Bore size given by clock gauge 3·2116 in.

3·2116 in. — ·001 in. = 3·2106 in.

Nearest piston size to 3·2106 is D grade and this would be the piston to use.

Piston clearance cannot be checked by the feeler method because of:—

1. The very close clearance between the piston skirt and cylinder bore.

2. This clearance only exists over a quite narrow part of the piston skirt at its largest diameter.

TO REBORE CYLINDER BLOCK AND FIT OVERSIZE PISTONS

When reboring cylinders to suit oversize pistons each bore is machined to the actual diameter of the piston to be fitted, plus the specified clearance in the bore.

The recommended bore finish is a "cross hatched" hone finish of 20-40 micro inches. This finish is equivalent to that obtained by thoroughly rubbing a used cylinder bore with partly worn No. 1 grade emery cloth to give a matt surface. The cutting tool of the boring machine should be set to bore the maximum diameter of the piston, measured at the bottom of the piston skirt at a right angle to the gudgeon pin, plus its prescribed clearance in the cylinder bore less a small amount for honing.

It is advisable to regrind and reset the cutter after completing each cylinder bore.

Bores must be parallel and round to within ·0004 in. (·01 mm.). The use of a cylinder gauge such as a Mercer, used with a ring gauge, is recommended for taking measurements. Top, middle and bottom of each bore should be checked both in line with and at right angles to the gudgeon pin axis.

SERVICE REPLACEMENT CYLINDER BLOCK

It is normal practice to supply cylinder blocks separately, but a set of suitably graded pistons can be supplied to suit any given block. Cylinder blocks complete with pistons are not serviced under one part number.

It is essential to ensure that each new piston is fitted into a bore of appropriate grade.

CYLINDER LINERS

To fit

These instructions apply to engines which are not fitted with liners during initial assembly. Some engines, however, are fitted with liners during production and these should be dealt with as described under "CYLINDER LINERS — To renew". If the fitting of liners is to prove really successful a high degree of skill on the part of the operator is required, coupled with first-class precision equipment.

If, however, after considerable mileage, it should be decided to install liners, it is absolutely essential that the procedure laid down in the ensuing paragraphs is rigidly adhered to, as otherwise there is every possibility of the operation proving unsatisfactory.

The outside diameter of the service cylinder liner is given in the Data Section under "Cylinder block".

Remove engine from chassis and dismantle.

Measure external diameter of liners.

Measure diameter of bores below piston ring travel.

Bore out the cylinders to suit liners, allowing for the prescribed interference fit of ·002 in.-·004 in. (0·051-0·101 mm.). It is important that the correct figures are strictly adhered to. Every possible precaution must be taken to ensure concentricity and correct size for the full length of the bore.

Finish boring must not be attempted until all liners have been fitted.

Press in liners. To facilitate fitting, a "lead-in" is provided at the lower end of the liner.

When insertng the liners, the load should be released several times during the first inch or so, thus allowing the liner to correct any misalignment.
Press the liner home flush with the top of the cylinder block.

When each of the liners has been treated as above, the liners may be finish bored and honed to suit the new pistons, allowing for piston clearance as previously described.

Cylinder liners may be rebored only up to ·040 in. (1·01 mm.) oversize.

To renew

The method used to remove liners will depend to a great extent on the facilities available. Liners may be drawn or pressed out from the bottom only. Check the cylinder for concentricity and correct size for the full length. If the diameter is in excess of the dimension given on the previous page, the correct interference fit will not be obtained.

Provided the conditions set out above are correct, press in the new liners. Finally, bore and hone the liners to suit the standard pistons.

CRANKSHAFT

Main bearings — to remove and replace

The main bearing shells for these engines are white metal lined and are interchangeable.

Main bearing shells are available in standard size and undersizes as detailed in the General Data Section under "Crankshaft".

If required, the main bearing shells can be removed for inspection, or renewed, provided the crankshaft main bearing journals are not worn or scored, without removing the crankshaft from the engine.

When carrying out this operation the following procedure should be followed:

Drain engine oil.

Remove sump and oil pump.

Remove timing cover.

Remove timing chain tensioner and its support pin. This is necessary because the support pin screws into the front main bearing cap.

Slacken all main bearing fixing bolts one or two turns.

Starting at one end of the crankshaft remove the bottom main bearing cap, and the corresponding top half bearing by pushing it around the crankshaft journal, with a piece of thin metal from the opposite side to its locating lip.

Replace the bottom bearing and cap to support the crankshaft before proceeding to remove the next main bearing cap.

Top half bearings are replaced in a reverse manner to that described for removal. The following points should be noted:

(*a*) Ensure that locating lips engage correctly in their respective recesses.

(*b*) Bearings are stamped according to their sizes and on renewal the same size must be fitted except when an

undersize crankshaft is fitted. In such cases the correct undersize bearings must also be fitted.

(c) When replacing bearing caps particular attention should be given to cleanliness of the mating faces and the oil return thrower recess in the rear main bearing housing.

(d) Before replacing the front and rear main bearings a very small quantity of Wellseal (or other non-setting jointing compound) should be painted onto the sides of the cylinder block recess into which the bearing caps locate. See Fig. 12 under "OIL SUMP — to refit".

(e) Ensure that the front main bearing cap is pulled up against the timing case before fully tightening the front main bearing cap bolts.

As each bearing is tightened up the crankshaft should be turned to ensure that it is free. The correct torque wrench figure for the main bearing bolts is given in the Data Section under "Crankshaft".

Crankshaft end thrust

Crankshaft end thrust is taken by two semi-circular steel washers having bearing metal thrust faces. These faces are easily recognised by the two vertical oil grooves cut across the bearing metal. The washers are fitted with their bearing metal thrust faces towards the crankshaft thrust faces and may be removed by pushing them around the crankshaft centre journal after taking off the centre main bearing caps.

Endfloat of the crankshaft can be checked by using feeler gauges.

The correct endfloat is given in the General Data Section under "Crankshaft".

·005 in. (·127 mm.) oversize thrust washers are available for use with crankshafts which have had the thrust faces reground at each end of the centre main bearing journal.

Crankshaft — to remove

Remove engine from chassis.

Remove cylinder head, push rods and tappets.

Remove timing wheels and chain.

Remove engine front plate and sump.

Remove connecting rods and pistons.

Remove clutch (see Section D) and flywheel.

Remove main bearing cap bolts, and caps.

Lift out crankshaft.

Crankshafts having oval or scored journals should be replaced by factory reground units. These are available in the undersizes given in the Data Section under "Crankshaft". Similar dimensioned undersize main and big end bearings can also be obtained.

Crankshaft — to refit

Check that oilways are clear.

Placing crankshaft in position, checking that top halves of the main bearings and thrust washers (centre) are correctly fitted into the crankcase.

Thrust is taken by two half washers fitted to the side faces of the centre main bearing in the cylinder block.

Fit lower halves of bearings together with main bearing caps.

Replace main bearing cap bolts. Check that the machined front face of the front main bearing cap is in alignment with the machined front surface of the cylinder block.

Tighten bolts to the correct torque given in the Data Section under "Crankshaft".

Check endfloat to crankshaft as previously described.

Reassemble engine to instructions given in foregoing section, and refill sump with fresh engine oil.

Crankshafts — regrinding

The correct, and maximum permissible undersizes are given in the Data Section under "Crankshafts". These must be used when regrinding crankshafts. Not more than ·005 in. (·127 mm.) can be removed from each thrust face at the ends of the crankshaft centre journal.

FLYWHEEL

To remove and refit

Remove gearbox and bell-housing. (See Section E.)

Remove clutch. (See Section D.)

Knock flywheel tabwashers clear of setbolts.

Remove setbolts.

Remove flywheel from crankshaft flange. It will be found expedient to screw a stud of suitable size into the top setbolt hole before levering off flywheel, to prevent the flywehel from falling accidentally with possible damage to the starter ring.

To replace, reverse the above order of operations, observing the following notes:

It is important that the flywheel fits squarely on crankshaft. Should the dowel have come away with the

flywheel when it was removed, tap it out of the flywheel and refit in crankshaft.

Make sure that surface of crankshaft flange and register in the flywheel are perfectly clean and free from burrs, as otherwise the flywheel may not seat properly on the crankshaft.

Tighten set bolts to the torque given in the Data Section and check for run-out at outer edge of flywheel clutch facing. A total clock gauge reading of ·003 in. (·076 mm.) must not be exceeded.

Lock setbolts with new lockwashers.

FLYWHEEL RING GEAR

The starter ring gear is a shrink fit onto the flywheel and can be renewed.

To remove

Using a suitable size drill, drill a hole through the starter ring between the bottom of two of the gear teeth, as deep as possible without entering the flywheel. Split the gear at this point with a sharp cold chisel and lift the split gear off the flywheel, noting that the gear teeth chamfers sides come to the clutch side of the flywheel.

To fit new ring gear

Ensure that the registering faces of the flywheel and starter ring gear are clean and free from burrs.

The new ring gear must be heated in an oven maintained at a temperature of 220°C (428°F) until it has attained this temperature. If the oven temperature exceeds this figure the gear will be softened and wear raidly.

The ring gear must not be heated by a naked flame.

Place the heated ring gear in position on the flywheel with the chamfered sides of the teeth toward the clutch side of the flywheel.

Make sure that the ring gear is bedding against the flywheel so that the ring gear is in its correct position as it cools down.

FLYWHEEL CENTRE BEARING

To remove and refit

The clutch spigot bearing is of self-lubricating bush type, and a push fit in crankshaft end recess. To remove the bush for replacement, use an internal type extractor. An alternative method of removing an old bush is to fill it with grease, then insert a close fitting piece of steel bar. A hammer blow on the end of the bar will then cause the bush to come out. It is most essential that the new spigot bush should be soaked in engine oil for 24 hours before fitting, preferably at room temperature.

The new bush should be pressed into position until flush with the rear face of the crankshaft flange.

CLOSED CRANKCASE VENTILATION SYSTEM

This crankcase ventilation system is fitted to the engines of cars supplied to areas where regulations forbid the discharge of crankcase fumes direct into the atmosphere.

Description — See Fig. 31

The system consists of three items which are:

A regulating valve screwed into the inlet manifold.

A flame trap.

Three connecting hoses.

The regulator valve outer end is connected by one hose to either the oil filler tube on the rocker cover or the tappet chamber cover plate.

The flame trap is connected by a hose to a connection on the carburettor and by another hose to whatever point is used for the entry of clean air into the engine crankcase.

Operation — See Fig. 31

When the engine is idling inlet manifold depression is high enough to draw the regulator valve (2) onto its seat (4) in the regulator body so that only a small amount of air can pass through the valve (2).

As the throttle is opened, while the engine is running, inlet manifold depression decreases and the spring (3) lifts the valve (2) from its seat. This allows crankcase fumes and air to be drawn into the inlet manifold, and clean ventilating air to pass from the carburettor intake through the flame trap into the engine. INCORRECT OPERATION OF THIS VALVE CAUSES BAD IDLING.

Servicing

This must be carried out at the recommended intervals given in the owner's handbook or more frequently where short journeys or slow speed driving are usual.

Neglect of servicing will cause sludge and water formation inside the engine which will increase engine wear.

Regulator valve — cleaning

Dismantle and check the condition of the valve seat (4) and valve (2).

If they are worn a new regulator valve assembly should be fitted.

The condition of the spring (3) is very important as it controls the opening and closing of the valve (2) against

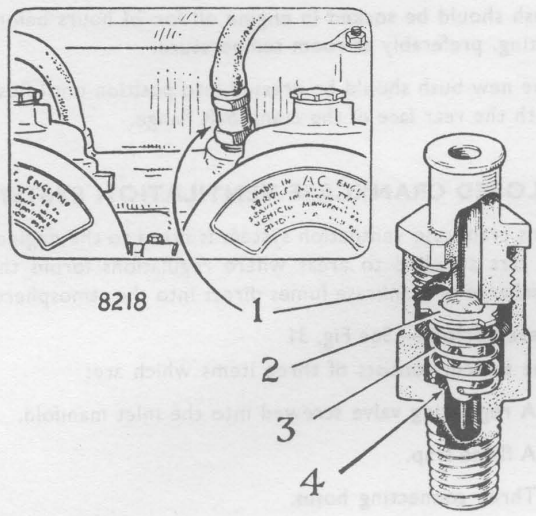

Fig. 31. *Crankcase ventilation valve—used with closed crankcase ventilation system.*

inlet manifold vacuum. If damaged or corroded it must be replaced.

When re-assembling the valve unit, make sure that the spring (3) is correctly located in the body and that the valve (2) is not tilted across the body.

Regulator valve — testing

Refit the valve unit to the inlet manifold leaving the connecting hose off of the valve unit inlet end.

1. Using a short rod, push the valve (2) downward against its seating. Then remove the rod and check that the valve moves away from its seat under the action of the spring (3). This check is made with the engine stationary.
2. Run the engine and check that it idles correctly. When idling it should be possible to push the valve (2) hard against its seat without altering the slow running performance.
3. Open the throttle quickly to bring the engine speed up to about 3000 r.p.m. and then release the throttle. SUDDEN CLOSING OF THE THROTTLE SHOULD ALLOW THE ENGINE TO IDLE CORRECTLY.
4. If correct operation of the ventilation valve cannot be obtained the spring (3) should be renewed or the complete valve changed. The springs are very sensitive. THEY MUST NOT BE STRETCHED OR FULLY COMPRESSED.

Connection hoses

If necessary these should be removed and cleaned internally.

Flame trap

The flame trap should be washed in kerosene (paraffin) and inverted so that it drains dry. It is positioned so that any oil passing into it can drain back into the engine.

ENGINE — Removal procedures

The engine can be removed by unbolting it from the clutch bell housing leaving the gearbox in position.

It is also possible to remove the engine and gearbox as a complete unit. This is sometimes the longer of these two methods.

On cars fitted with automatic transmission the engine and automatic transmission must be removed as a complete unit.

To remove engine — leaving gearbox in position

Work underneath car

Drain engine sump.

Disconnect exhaust pipe(s) from exhaust manifold flange and loosen clip holding the other end of pipe. Remove pipe(s).

Unbolt clutch operating cylinder from clutch bell housing and move cylinder aside. Do not disconnect hydraulic feed pipe.

Remove both brackets connecting clutch bell housing to sump face fixing bolts, and fuel pipe fixing clip.

Remove cover plate from clutch bell housing behind rear end of sump.

On cars fitted with steering column gear change, disconnect linkage as required.

Work under bonnet

Drain cooling system with heater control in the HOT position.

Mark around both bonnet hinges with pencil to assist replacing bonnet in similar position.

Remove hinge fixing bolts and lift off bonnet.

Disconnect and remove battery.

Disconnect top and bottom water hoses from engine ends.

Remove four bolts holding radiator to its mounting position and lift out radiator.

Remove fan belt, fan blades and fan pulley.

Disconnect throttle and choke operating mechanism, heater hoses at water pump and cylinder head connections, and generator leads or alternator leads.

Disconnect lead from water gauge connection.

Remove air intake silencer.

Disconnect oil gauge pipe (if fitted) and fuel feed pipe to fuel pump. Blank fuel pipe if needed.

Attach lifting chains so that engine weight is taken above centre of rocker cover and raise engine just enough to allow removal of front engine mounting rubbers.

Lower engine so that crankshaft pulley is only just clear of the front crossmember.

Remove two top bolts holding clutch bell housing to engine.

Raise engine to its normal position and remove remaining bolts holding clutch bell housing to engine.

Carefully draw engine forward to withdraw gearbox stem wheel shaft spline from the clutch centre plate.

Lift out engine.

To refit engine — with gearbox still in position

This is a reversal of the removal procedure. Care should be taken to ensure that the engine and clutch bell housing faces are in line and parallel before attempting to slide the clutch centre plate splines onto the splines of the gearbox stem wheel shaft. If necessary, the engine can be turned by using a spanner on the starting handle dog nut.

The engine should be refilled with the correct grade of oil and the oil level checked again after running the engine, as about 1 pint (·56 litres) of oil will be taken to fill the oil filter and oilway passages.

If a steering column gear change is fitted its action should be checked after refitting the linkage. The correct method of adjustment is given in Section E.

To remove engine — with gearbox attached

Work inside car

Remove front carpet and gear shift lever. (Centre gear shift only).

Work under car

Drain engine sump and gearbox.

Disconnect exhaust pipe(s) from exhaust manifold flange and loosen clip holding the other end of pipe. Remove pipe(s).

Unbolt clutch operating cylinder from clutch bell housing and move cylinder aside. Do not disconnect hydraulic feed pipe.

On cars fitted with steering column gear change, disconnect linkage as required.

Disconnect propellor shaft at rear axle pinion flange and carefully withdraw shaft from gearbox. Protect gearbox end of propeller shaft by wrapping with clean paper.

Remove bolts passing through the gearbox mounting rubber and crossmember.

Support gearbox weight by means of a trolley jack pushed under the car from end. The jack crutch should take the weight on the gearbox drain plug.

Remove crossmember at rear of gearbox by taking out its four fixing bolts, two each side.

Work under bonnet

Drain cooling system with heater control in the HOT position.

Mark around both bonnet hinges with pencil to assist replacing bonnet in similar position. Remove hinge fixing bolts and lift off bonnet.

Disconnect and remove battery.

Disconnect top and bottom water hoses from engine ends.

Remove four bolts holding radiator to its mounting position and lift out radiator.

Disconnect throttle and choke operating mechanism, heater hoses at water pump and cylinder head connections, and generator or alternator leads.

Disconnect lead from water gauge connection.

Remove air intake silencer.

Disconnect oil gauge pipe (if fitted) and fuel feed pipe to fuel pump. Blank end of fuel pipe if needed.

Attach lifting chains so that engine weight is taken at the front end and the engine with gearbox attached will hang at about 45° from the vertical.

Gradually lower gearbox end of unit by lowering the jack and pulling it forward at the same time raising the front of the engine.

Lift out engine.

To replace engine — with gearbox attached

The engine unit should hang at about 45° from the vertical and when lowered far enough into position the jack should be used to gradually raise the gearbox end while the front end of the engine is lowered into position as the trolley jack is pushed backwards.

Coupling of controls, etc., is a reversal of the removal procedure.

The engine should be refilled with the correct grade of oil and the oil level checked again after running the engine, as about 1 pint (·56 litres) of oil will be taken to fill the oil filter and oilway passages.

Refill gearbox.

If a steering column gear change is fitted its action should be checked after refitting the linkage. The correct method of adjustment is given in Section E.