STEERING GEAR

SECTION J

CONTENTS

	Page
ADJUSTABLE STEERING UNIT	18
—To remove and refit	18
—To dismantle and reassemble	18
—Filling up or topping up	11
BALL JOINTS	22
—To remove and refit	22
—To check wear	23
BALL JOINT COVER	22
—To renew	22
CENTRE CROSS TUBE	21
—To remove and refit	21
DIAGNOSIS OF FAULTS	23
DIRECTION INDICATOR SWITCH	5
—To remove and refit (Rigid steering units)	6
—To remove and refit (Adjustable steering units)	6
GENERAL DESCRIPTION	3
HORN RING ASSEMBLY	7
—To remove and refit (Rigid steering units)	7
—To remove and refit (Adjustable steering units)	9
INNER COLUMN BEARINGS	16
—To preload	16
MAINTENANCE	3
OVERDRIVE SWITCH	7
—To remove and refit (Rigid steering unit)	7
—To remove and refit (Adjustable steering unit)	7

RELAY LEVER ASSEMBLY ... 20
—To remove and refit ... 20
—To dismantle and reassemble ... 20
—Bushes—To renew ... 21

ROCKER SHAFT ... 16
—Endfloat—To check and adjust ... 16
—Bush—To renew ... 16

STEERING ARM ... 23
—To remove and refit ... 23

STEERING COLUMN COWLING ... 3
—To remove and refit (Minx and Gazelle) ... 3
—To remove and refit (Super Minx and Vogue) ... 5
—To remove and refit (Alpine, Rapier, Sceptre) ... 5

STEERING LINKAGE ... 21
—Centre cross tube—To remove and refit ... 21
—Track rods—To remove and refit ... 22

STEERING UNIT ... 11
—To remove and refit ... 11
—To dismantle and reassemble ... 15
—Felt bush—To renew ... 17
—Filling up or topping up ... 11
—Ratio—To check ... 17

STEERING WHEEL (ADJUSTABLE STEERING UNIT) ... 10
—Adjusting the height ... 10
—To remove and refit ... 10

STEERING WHEEL (RIGID STEERING UNIT) ... 10
—To remove and refit ... 10

TRACK RODS ... 22
—To remove and refit ... 22

WORM CAM HELIX ... 17
—Ratio—To check ... 17

STEERING GEAR

GENERAL DESCRIPTION

Steering is effected by a symmetrical linkage consisting of two swing levers, a centre cross tube and two track rods.

The two swing levers are included in the steering unit and relay lever assembly and are connected together at their rear ends by the centre cross tube. The two track rods are fitted between the forward ends of the swing levers and the steering arms mounted on the stub axle carriers.

The rearward length of both swing levers is such that the centre cross tube will pass behind the cylinder block and above the clutch bell housing while the forward pointing length is designed so the steering will not be effected by the rise and fall of the independent front suspension units due to irregular road surfaces.

Movement of the steering wheel is transferred to the front wheel, nearest the steering unit, by the swing lever attached to the steering unit and one track rod. Then, to the opposite front wheel by the centre cross tube, the swing lever of the relay lever assembly, and the second track rod.

MAINTENANCE

Maintenance checks will be required at regular intervals as given in the "Owner's Service Book" and "Owner's Handbook" which will include the following:—

(i) Checking the security of the steering unit, relay lever assembly, the steering unit swing lever, centre cross tube, track rod ball joints and steering arms.

(ii) Checking the oil level in the steering unit.

(iii) Checking the alignment of the track rod ball joint sockets on the tapered pins.

(iv) Checking the condition of the dust covers on the track rod ball joints.

STEERING COLUMN COWLING, SWITCHES, HORN RING AND STEERING WHEEL

STEERING COLUMN COWLING

(Rigid steering units)

Minx and Gazelle (Fig. 1)

The steering column cowling is fabricated in two halves, the upper cowling being attached to the steering column and the lower cowling "snapped" onto the upper cowling. The mating edges are cut away to accommodate the protruding lever of the direction indicator switch and in the instance of the Gazelle only, when fitted, the protruding lever of the overdrive switch.

To remove and refit

1. Spring the lower cowling from the upper cowling.
2. Remove the upper cowling from the steering column by withdrawing four screwed ball pins and two "U" brackets.
3. Refitting is the reverse of the removal sequence but particular attention must be given to the following:—

   (i) The upper cowling is located on the steering column by a raised key and must be central over any protruding lever(s) when they are in the off position.

   (ii) The four spire clips are fitted to the lower cowling with two screws each and the shape of the spire clip follows the shape of the cowling.

Super Minx and Vogue (Fig. 1)

The steering column cowling is fabricated in two halves, the lower cowling being attached to the steering column and the upper cowling is secured to the lower cowling by screws passing through the latter. The mating edges are cut away to accommodate the protruding lever of the direction indicator switch. A small trim clip is fitted between the upper cowling and the instrument panel.

In the instance of the Vogue only, when fitted, the overdrive switch is mounted in the lower cowling.

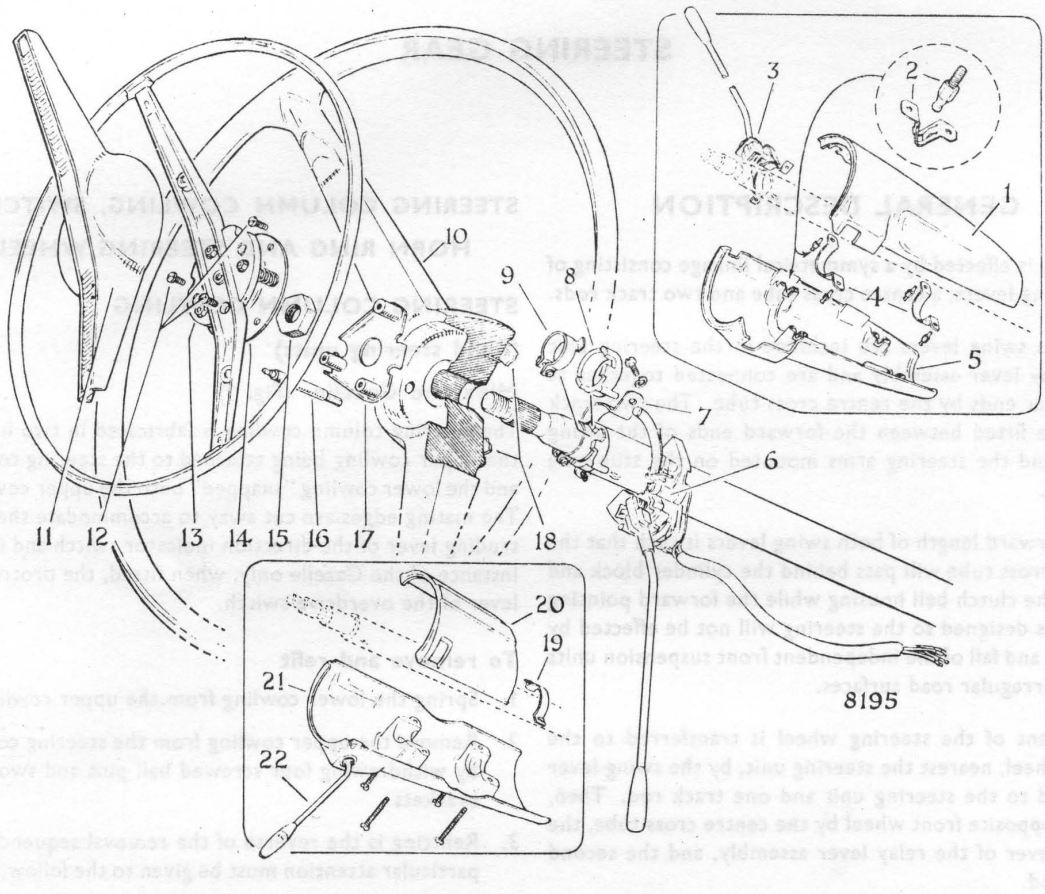

Fig. 1 *Exploded view of steering column cowling, switches, horn ring and steering wheel of the rigid steering unit. The top insert shows the Minx and Gazelle cowling with the Gazelle overdrive switch while the bottom insert shows the Super Minx and Vogue cowling with the Vogue overdrive switch.*

1. UPPER COWLING
2. BALL PIN AND SPIRE CLIP
3. OVERDRIVE SWITCH
4. CLIPS
5. LOWER COWLING
6. DIRECTION INDICATOR SWITCH
7. CLIP
8. STRIKER BUSH
9. DRIVER
10. STEERING WHEEL
11. MOTIF
12. HORN RING SCREWS
13. HORN RING
14. LOWER CONTACT PLATE
15. STEERING WHEEL NUT
16. PLUNGER
17. ANCHOR PLATE
18. SLIP RING
19. CLIP
20. UPPER COWLING
21. LOWER COWLING
22. OVERDRIVE SWITCH

To remove and refit

1. Remove the trim clip from between the upper cowling and the instrument panel by spreading its top end and lifting it upward to withdraw the "legs" from beneath the instrument panel.

2. Remove the upper cowling from the lower cowling by withdrawing the two screws nearer the steering wheel through the lower cowling.

3. Remove the lower cowling from the steering column by withdrawing two screws, furthest from the steerng wheel and collecting a clip from above. When an overdrive switch is fitted, disconnect the electrical harness from the switch terminals.

4. Refitting is the reverse of the removal sequence.

STEERING COLUMN COWLING

(Adjustable steering units)

Alpine (Fig. 2)

The steering column cowling is fabricated in two halves, the upper cowling being attached to the steering column and the lower cowling attached to the upper. The mating edges are cut away to accommodate the protruding lever of the direction indicator switch and, when fitted, the body of the overdrive switch.

Rapier and Sceptre (Fig. 2)

The steering column cowling is identical to that described in the previous paragraph but two additional cowling extensions are fitted between the aforementioned cowlings and the instrument panel.

To remove and refit

1. Remove the upper and lower cowling extensions, when fitted, from the steering column just above the instrument panel by withdrawing two screws.

2. Remove the lower cowling from the upper by withdrawing three screws.

3. Detach the overdrive switch, when fitted, from beneath the upper cowling and lay to one side.

4. Remove the upper cowling from the steering column by withdrawing four screws and a clip.

5. Refitting is the reverse of the removal sequence but particular attention must be given to the following points:—

   (i) Set the steering wheel in its lowest position, and refit the upper cowling centrally over the direction indicator switch and so there is ·050 in. (1 mm.) clearance between the top edge of the upper cowling and the steering wheel hub; the spire nut on the upper cowling clip is positioned towards the steering wheel.

   (ii) The overdrive switch, when fitted, is positioned between the edges of the upper and lower cowlings as the lower cowling is being offered up.

DIRECTION INDICATOR SWITCH

The direction indicator switch, which incorporates a headlamp flasher, is located on the top end of the outer column by a raised key with a striker mounted on the inner column.

On completion of a turn, as the steering wheel returns to the straight ahead position, the striker rotating with the inner column actuates the cancelling mechanism in the switch and returns it to the "off" position. The self-cancelling operation is only operative when the steering wheel has been turned, in the first instance, more than 60° in either direction.

There are two types of strikers and these are fitted according to the type of steering unit.

(i) Rigid steering units

A non-metallic bush, fitted into the top end of the outer column and rotated by a metal driver mounted on the inner column. The bush has a "pip" formed on its outer edge to actuate the cancelling mechanism in the direction indicator switch.

(ii) **Adjustable steering units**

A metal band, mounted on the swaged section of the inner column, having a downward pointing finger to actuate the cancelling mechanism in the direction indicator switch.

To remove and refit (Rigid steering units)

1. Disconnect the battery.

2. Remove the steering column cowling from the steering column, see under "Steering column cowling —To remove and refit".

3. Remove the direction indicator switch from the top of the outer column by withdrawing two screws, washers and a clip, in some instances the clip may be replaced by an overdrive switch which must be laid to one side.

4. When it is necessary to remove the striker bush, first remove the steering wheel, see under "Steering wheel—To remove and refit", then remove the driver and striker bush from the inner and outer columns respectively by releasing the pinch bolt of the driver.

5. Refitting is the reverse of the removal sequence but particular attention must be given to the following:—

   (i) Set the front wheels in the straight ahead attitude by positioning them parallel to the rear wheels.

   (ii) Rock the top end of the inner column within the outer, when excessive clearance is evident a new felt bush must be fitted, see under "Felt bush—To renew".

   (iii) Refit the striker bush and driver so the "pip" on the striker bush aligns with the switch locating key on the outer column, permit a small working clearance between the striker bush and driver before tightening the pinch bolt.

   (iv) Refit the direction indicator switch by locating the key on the outer column with the overdrive switch on the opposite side as necessary, set the height of the direction indicator switch so its springs make full contact with the "pip" of the striker bush.

   (v) Ensure that the spring blade on the top face of the direction indicator switch contacts the slip ring in the underside of the steering wheel hub otherwise horn failure may result.

To remove and refit (Adjustable steering units)

1. Disconnect the battery.

2. Remove the steering column cowling from the steering column, see under "Steering column cowling—To remove and refit".

3. Remove the direction indicator switch from the top of the outer column by withdrawing two screws, washers and a clip.

4. When it is necessary to remove the striker, first remove the steering wheel, see under "Steering wheel—To remove and refit", remove the slip ring from the inner column by slackening off the striker pinch bolt and withdraw the striker from the underside of the slip ring.

5. Refitting is the reverse of the removal sequence but particular attention must be given to the following:—

   (i) Set the front wheels in the straight ahead attitude by positioning them parallel to the rear wheels.

   (ii) Refit the direction indicator switch by locating the raised key and flush with the top end of the outer column.

   (iii) Refit the striker and slip ring so the latter abuts to the circlip of the ball bearing assembly and the finger of the striker is between the two springs of the direction indicator switch.

   (iv) Ensure that the spring blade on the top face of the direction indicator switch contacts the underside of the slip ring in the underside of the steering wheel hub otherwise horn failure may result.

OVERDRIVE SWITCH

Three types of overdrive switches are fitted, two for the rigid steering units and a third for the adjustable steering unit.

(i) **Rigid steering units**

Fitted on the opposite side to the direction indicator switch by replacing the original clip on Gazelle cars.

(ii) Fitted into the lower cowling of the steering column cowling on Vogue cars.

(iii) **Adjustable steering units**

Gripped between the upper and lower steering column cowlings on the opposite side to the direction indicator switch on Alpine, Rapier and Sceptre cars.

To remove and refit (Rigid steering units)

1. Follow the procedure given under "Direction indicator, rigid steering units—To remove and refit" for Gazelle cars.
2. Remove the steering column cowling, see under "Steering column cowling, Super Minx and Vogue cars—To remove and refit".
3. Disconnect the electrical harness from the overdrive switch.
4. Remove the overdrive switch from the lower cowling by releasing the bezel nut, for Vogue cars.
5. Refitting is the reverse of the removal sequence.

To remove and refit (Adjustable steering units)

1. Remove the lower steering column cowling from the upper by withdrawing three screws and withdraw the overdrive switch between the cowlings.
2. Disconnect the electrical harness from the overdrive switch.
3. Remove the overdrive switch from the clamp plate by releasing the bezel nut.
4. Refitting is the reverse of the removal sequence.

HORN RING ASSEMBLY (Rigid steering units)

(Fig. 1.)

The horn ring assembly consists of a two spoked ring, the centre of which incorporates the upper contact plate, mounted on a lower contact plate by three studs, springs, insulating bushes and nuts; thus the two contact plates are insulated from one another. The horn ring assembly is mounted in the steering wheel hub by the lower contact plate to the carrier plate fitted beneath the steering wheel nut. A cover and motif assembly is a press fit on the two horn ring spokes which align with those of the steering wheel.

A live cable from the horn(s) is connected by a spring blade on top of the headlamp flasher/direction indicator switch to a slip ring moulded into the steering wheel hub. A spring-loaded plunger connects this slip ring to the upper contact plate of the horn ring by passing through clearance holes in the carrier and lower contact plates; the two latter items are connected to earth by the steering unit inner column.

Pressure applied to the horn ring, "tilts" the upper contact plate onto the lower and completes the circuit from the horns. The three springs, between the two contact plates returns the horn ring to the "off" position when the pressure is released.

To remove and refit (Rigid steering units)

1. Disconnect the battery.
2. Prise the cover and motif assembly from the spokes of the horn ring.
3. Remove the horn ring assembly and spring plunger from the steering wheel hub by withdrawing three screws and washers from the lower contact plate.
4. When necessary, remove the carrier plate from the steering wheel hub by removing the steering wheel nut.
5. Refitting is the reverse of the removal sequence but particular attention must be given to the following:—

   (i) Locate the tongue on the underside of the carrier plate in the groove moulded in the steering wheel hub.

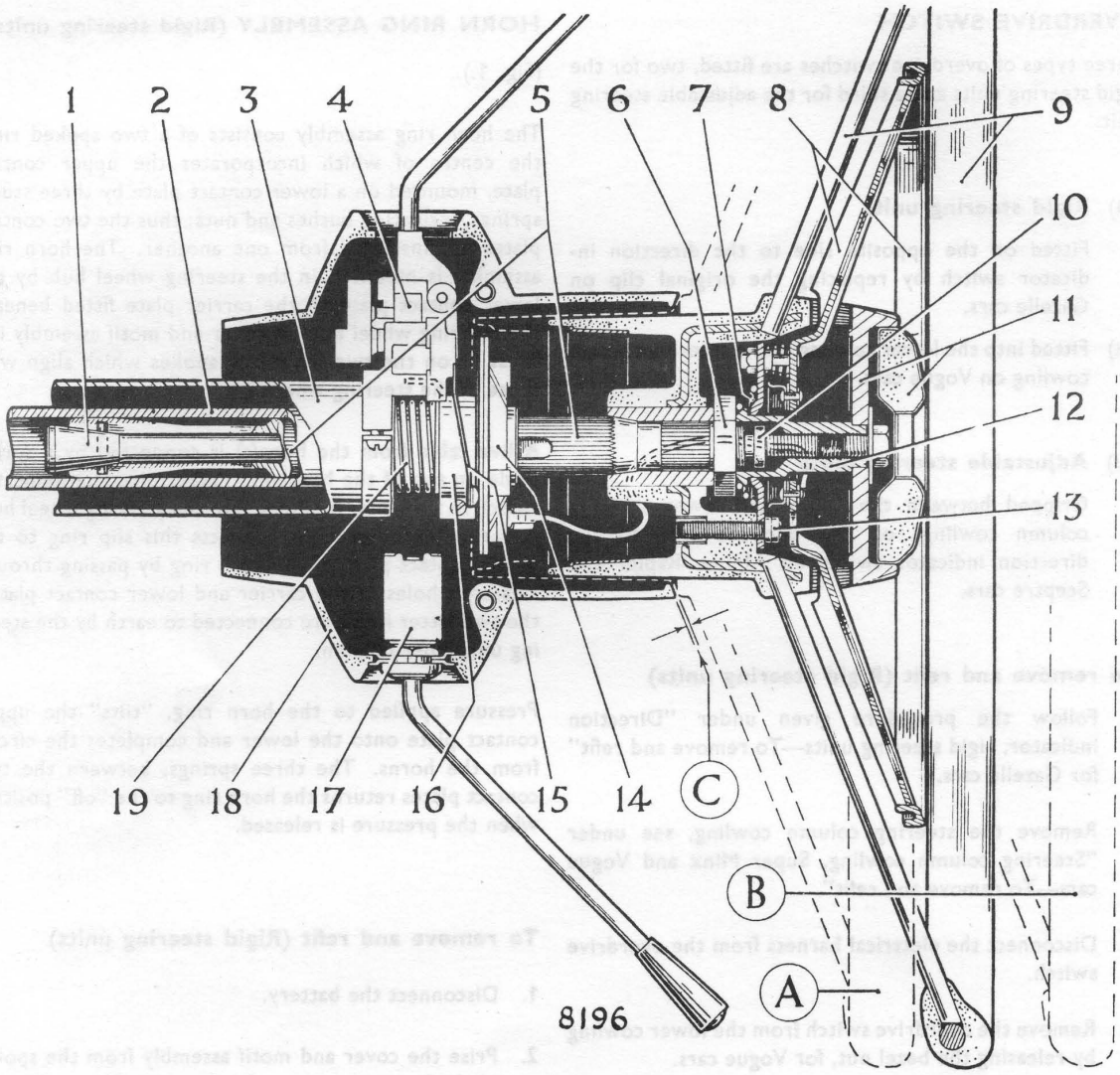

Fig. 2 *Cross section and cut away view of steering column cowling, switches, horn ring and steering wheel of the adjustable steering column.*

1. EXPANDER BOLT
2. INNER COLUMN
3. OUTER COLUMN
4. DIRECTION INDICATOR SWITCH
5. SPLINED EXTENSION PIECE
6. STEERING WHEEL NUT
7. EARTHING SPRING
8. HORN RING
9. STEERING WHEEL
10. NYLON CIRCLIP
11. ADJUSTING NUT AND MOTIF
12. EXPANDER BOLT EXTENSION
13. HORN RING SCREW
14. SLIP RING
15. SPRING BLADE
16. STRIKER
17. OVERDRIVE SWITCH
18. COWLING
19. BEARING SPRING

A. LOWEST POSITION OF STEERING WHEEL

B. HIGHEST POSITION OF STEERING WHEEL

C. ·050 in. (1 mm.) CLEARANCE

(ii) The spring plunger is fitted hexagon end downwards and its top end must locate the hole in the upper contact plate.

(iii) The amount of "tilt" required to sound the horns can be decreased or increased by tightening or slackening the three nuts on the top face of the upper contact plate but it is essential that the two contact faces are kept parallel.

HORN RING ASSEMBLY (Fig. 2)

(Adjustable steering unit)

The horn ring assembly consists of a two spoked ring, the centre of which incorporates the upper contact plate, mounted on a lower contact plate by three studs, springs, insulated bushes and nuts; thus the two contact plates are insulated from one another. The horn ring assembly is mounted directly onto the steering wheel hub by the lower contact plate. A motif assembly is incorporated in the steering wheel adjusting nut.

A live cable from the horns is connected by a spring blade on top of the headlamp flasher/direction indicator switch to a slip ring mounted on, but insulated from, the steering unit inner column.

A cable fitted to the "Lucar" connector on the top of the slip ring, passes through a hole in the steering wheel hub and a cut-out in the lower contact plate to the upper contact plate. The length of the cable is such that it allows for the adjustable height of the steering wheel. The lower contact plate is earthed by a spring between itself and the steering wheel nut.

Pressure applied to the horn ring "tilts" the upper contact plate onto the lower and completes the circuit from the horns. The three springs, between the two contact plates return the horn ring to the "off" position when the pressure is released.

To remove and refit (Adjustable steering units)

1. Disconnect the battery.

2. Lock the steering wheel in its highest position.

3. Remove the lower cowling of the steering column cowling by withdrawing three screws.

4. Disconnect the cable from the "Lucar" connector on the top face of the slip ring.

5. Prise the motif from the steering wheel adjusting nut.

6. Remove the steering wheel adjusting nut from the top of the expander bolt extension by withdrawing a bolt and washer.

7. Remove the horn ring assembly from the steering wheel hub by withdrawing three screws and washers, easing the cable through the steering wheel hub; the conical-shaped earthing spring will normally remain under the expander bolt extension.

   When it is necessary to remove the slip ring, remove the steering wheel, see under "Steering wheel, adjustable steering units—To remove and refit" and slacken off the pinch bolt of the direction indicator striker beneath the slip ring.

8. Refitting is the reverse of the removal sequence but particular attention must be given to the following:—

   (i) When refitting the slip ring, abut its underside edge to the circlip of the ball bearing assembly and ensure that the slip ring surface contacts the spring blade of the headlamp flasher/direction indicator switch; set the front wheels in the straight ahead attitude by positioning them parallel to the rear wheels, set the finger of the striker mid-way between the springs of the direction indicator switch and tighten the pinch bolt.

   (ii) The amount of "tilt" required to sound the horns can be decreased or increased by tightening or slackening the three nuts on the underside of the lower contact plate but it is essential that the two contact faces are kept parallel.

   (iii) The small end of the conical-shaped earthing spring is positioned beneath the expander bolt extension.

   (iv) Pass the "Lucar" end of the cable through the hole in the steering wheel hub and ensure that the cable passes through the cut-out in the lower contact plate, draw its excess length towards the slip ring.

STEERING WHEEL (Rigid steering units) (Fig. 1)

The two-spoke steering wheel is mounted on the inner column of the steering unit by a taper, parallel splines and a nut.

To remove and refit (Rigid steering units)

1. Remove the horn ring assembly from the steering wheel, see under "Horn ring, rigid steering unit—To remove and refit".
2. Identify the position of the steering wheel to the inner column, remove the steering wheel and carrier plate from the inner column by detaching the nut.
3. Refitting is the reverse of the removal sequence but particular attention must be given to the following:—
   (i) Set the front wheels in a straight ahead attitude by positioning them parallel to the rear wheels and refit the steering wheel with the two spokes in a horizontal position, or to counteract any severe road camber, one spline removed in an anti-clockwise direction for right-hand drive cars or one spline removed in a clockwise direction for left-hand drive cars.
   (ii) Locate the tongue on the underside of the carrier in the groove moulded in the steering wheel hub.

STEERING WHEEL (Adjustable steering unit) (Fig. 2)

The steering wheel of the telescopic steering unit is mounted on a splined extension piece by a taper, parallel splines and a nut. The splined extension piece slides in the inner column and provides the height adjustment.

As the steering wheel adjusting nut is slackened off the expander bolt extension on which it is mounted, rides up the expander bolt until its flanged end contacts the lower contact plate of the horn ring assembly.

Reactionary movement causes the expander bolt to move downwards and release its grip on the splined extension piece, permitting the latter freedom of movement within the inner column. As the steering wheel is mounted on the splined extension piece, it can be raised or lowered as required.

When the steering wheel adjusting nut is tightened, the tapered end of the expander bolt expands the splined extension piece within the inner column; thus the steering wheel can be locked at that height.

Adjusting the height

1. Release the steering wheel by slackening off the steering wheel adjusting nut in the centre of the steering wheel until it "clicks".
2. Move the steering wheel up or down to the desired height.
3. Lock the steering wheel in position by rotating the adjusting nut clockwise.

To remove and refit (Adjustable steering unit)

1. Remove the horn ring assembly from the steering wheel, see under "Horn ring assembly, telescopic steering units—To remove and refit".
2. Lower the steering wheel, this will prevent the expander bolt dropping down into the inner column, by slackening off the expander and giving it a small tap with a mallet to release the lock.
3. Remove the conical-shaped earthing spring from the steering wheel hub by removing the expander bolt extension; ensure that the nylon circlip is below the thread on the expander bolt.
4. Identify the position of the steering wheel on the splined extension and remove by detaching the nut.
5. Refitting is the reverse of the removal sequence but particular attention must be given to the following:—
   (i) Set the front wheels in the straight ahead attitude by positioning them parallel to the rear wheels and offer up the steering wheel with the oblong-shaped hole in the hub in approximately the six-o'clock position and with the two spokes in the horizontal position; or, to counteract any severe road camber, one spline removed in an anti-clockwise direction for right-hand drive cars or one spline removed in a clockwise direction for left-hand drive cars.

(ii) The conical-shaped earthing spring is fitted small end downwards before the expander bolt extension is fitted.

RIGID STEERING UNIT

Figs. 3 and 4

The rigid steering unit can be of Burman or Cam Gear manufacture but both are of the worm cam and nut type with steel balls forming the connection between worm cam and nut, these steel balls recirculate through a transfer tube attached to the bottom of the nut. The steering unit has a solid inner column with an integral worm cam for the nut, an outer column and steering box to house the inner column/worm cam, nut and rocker shaft.

The top end of the inner column is supported in the outer column by an impregnated felt bush and has a taper and parallel splines for the attachment of the steering wheel. The worm cam and nut at the bottom of the inner column is supported in the steering box by two rows of steel balls, one each side of the worm cam. The nut is prevented from rotating with the worm cam by a guide roller mounted on an extension of the nut and running in a channel formed in the underside of the steering box top cover.

The axis of the rocker shaft, in the steering box, is at right-angles to that of the inner column and a forked lever on the inner end of the rocker shaft connects with the extension formed on the nut. The outer end of the rocker shaft is splined for the attachment of the swing lever.

Rotary movement of the worm cam is converted into linear movement of the nut by the recirculating steel balls and the linear movement of the nut is imparted to the rocker shaft, through the engagement of its forked lever with the extension on the nut and therefore becomes rotary; thus movement of the steering wheel becomes steering action at the swing lever.

A damper button and two coil springs are positioned between the top of the rocker shaft and the spring cap bolted to the upper face of the steering box top cover and the two springs absorb road shocks transmitted through the steering linkage.

A rubber plug is fitted in the top cover to facilitate filling and topping up the steering unit with lubricant.

There are two types of steering boxes and outer columns:—

(i) Steering box only, when its lower end is closed by a welch washer and the outer column is separate. The inner column bearings are pre-loaded by the disposition of shims between the flanged end of the outer column and the upper end of the steering box.

(ii) Steering box with an integral outer column, in this instance the inner column bearings are pre-loaded by the same method but the shims are between the lower end of the steering box and an end cover at the opposite end to the outer column.

Filling and topping-up steering unit

Fill or top-up the steering unit with the recommended lubricant, see under "Steering unit—Recommended lubricants, Section P", by cleaning and removing the plug in the top cover of the steering unit, filling the steering box to overflowing and refitting the plug on completion.

When repeated topping-up is necessary, examine the steering unit for oil leaks, particuarly around the rocker shaft as it protrudes through the steering box, when leaking is detected at this point a new rocker shaft oil seal must be fitted.

To remove and refit (Rigid and adjustable steering units)

The removal and refitting sequences are similar for both types of steering units and the various cars. When differences do exist they are described under specific headings.

1. Disconnect the battery.

2. Remove the steering column cowling, direction indicator and overdrive switches, horn ring and steering wheel from the steering column, see under those respective headings for that type of steering unit and car.

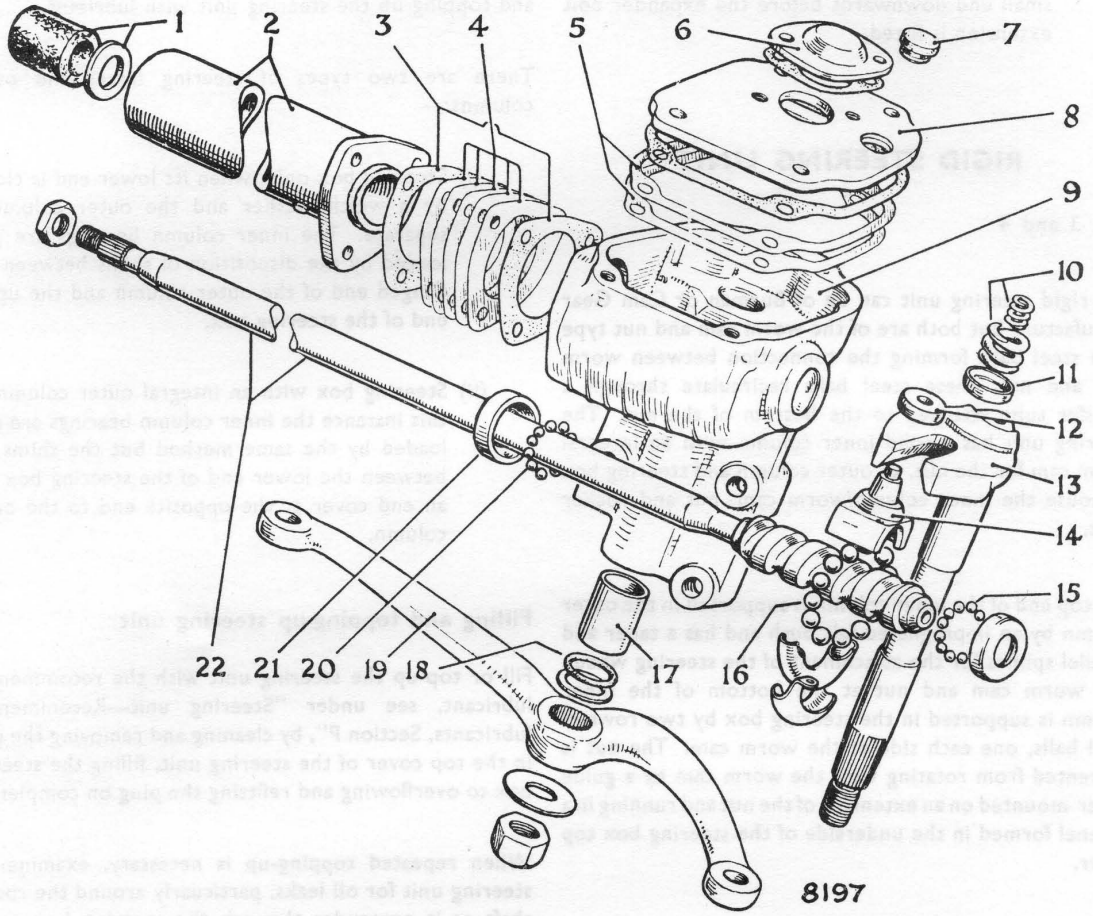

Fig. 3 *Exploded view of rigid type steering unit having the outer column method of adjusting inner column bearings.*

1. FELT BUSH AND WASHER
2. OUTER COLUMN
3. PAPER JOINTS
4. PRELOAD SHIMS
5. ROCKER SHAFT SHIMS
6. SPRING CAP
7. FILLER PLUG
8. TOP COVER
9. STEERING BOX
10. DAMPER SPRINGS
11. DAMPER BUTTON
12. GUIDE ROLLER
13. ROCKER SHAFT
14. NUT ASSEMBLY
15. SMALL STEEL BALLS
16. LARGE STEEL BALLS
17. ROCKER SHAFT BUSH
18. RING SEAL
19. SWING LEVER
20. SMALL STEEL BALLS
21. TOP BALL RACE
22. INNER COLUMN

3. When the car is equipped with a steering column gear change, disconnect and remove the linkage from the steering unit, see under "Steering column gear change—Gearbox, Section E".

4. Remove the parcel tray from beneath the instrument panel on the steering unit side.

5. Move the driver's seat forward to the full extent of its travel.

6. ***Minx, Gazelle, Rapier and Sceptre cars:*** Detach the steering column clip from the instrument panel bracket by removing a nut, washer, distance piece and pinch bolt.

   Super Minx and Vogue cars: Detach the steering column clip from the instrument panel bracket by withdrawing two bolts, washers and identifying the bolt securing the resetting cable of the trip odometer.

   Alpine cars: Withdraw the finisher from the instrument panel by removing two nuts and washers, detach the steering column from the instrument panel bracket by withdrawing two bolts and washers and an "X" shaped bracket.

7. Detach the swing lever from the steering unit rocker shaft by releasing the tabwasher, removing the nut and using a suitable extractor, RG.198D; to apply the extractor, slacken off the three steering unit attachment bolts, under the front wheel arch, and ease the steering unit away from the under-frame sidemember.

8. ***Alpine cars:*** Remove the bonnet, after marking the position of the hinges, by withdrawing eight bolts and washers, remove the bulkhead to wheel arch strut on the same side as the steering unit by withdrawing four bolts, washers and identifying any shims at the bulkhead end.

   Alpine right-hand drive cars: Remove the engine dipstick, distributor, tachometer drive, oil filter and fuel pump from the engine unit; slacken off the brake servo mountings.

9. ***Left-hand drive saloon cars:*** Remove the battery and battery carrier from the engine compartment and when fitted, the windscreen washer bottle, remove the drain pipe from the inlet manifold, slacken off the brake servo unit mountings.

10. Remove the bundy tubing from the clutch master and slave cylinders by releasing the union nuts and trapping any escaping fluid in a drip tray; slacken off the two master cylinders.

11. Ease the grommet from the bulkhead and slide it down the outer column.

12. Detach the steering unit from the underframe sidemember, identifying any shims between, by removing three nuts and washers.

13. Protect the inside of the car from oil, should it escape from between the inner and outer columns; lift up, and move the steering towards the front of the car and rotate it until the rocker shaft is uppermost and remove it from the engine compartment.

14. Remove the clip and packing as necessary, followed by the grommet from the outer column.

15. Refitting is the reverse of the removal sequence but particular attention must be given to the following:—

    (i) Position the grommet well down the outer column and the packing under the clip as necessary.

    (ii) Have the rocker shaft pointing upwards, feed the columns through the bulkhead and rotate the steering unit to its correct position as it is lowered into the engine compartment.

    (iii) Feed the large washers onto the three steering unit bolts and feed the bolts through from the wheel arch, refit the shims to their original positions and "nip-up" the three bolts; check the alignment of the steering column clip and instrument panel bracket, correct any misalignment by adjusting the thickness of the shim pack, ***this is important.*** Tighten the three bolts to the torque given in the "General Data Section".

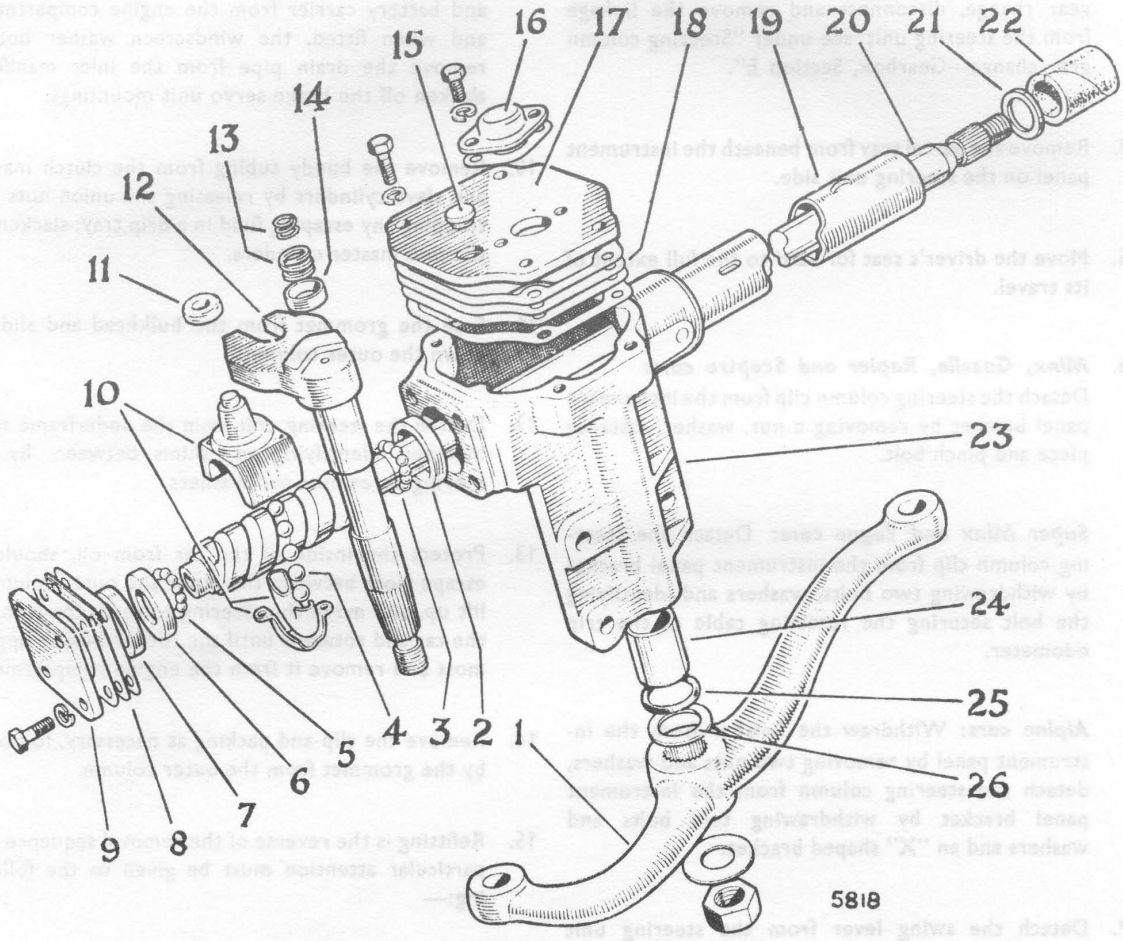

Fig. 4 *Exploded view of rigid type steering unit having the end cover method of adjusting inner column bearings.*

1. SWING LEVER
2. TOP BALL RACE
3. SMALL STEEL BALLS
4. LARGE STEEL BALLS
5. SMALL STEEL BALLS
6. BOTTOM BALL RACE
7. DISTANCE PIECE
8. PRELOAD SHIMS
9. END COVER
10. NUT ASSEMBLY
11. GUIDE ROLLER
12. ROCKER SHAFT
13. DAMPER SPRINGS
14. DAMPER BUTTON
15. FILLER PLUG
16. SPRING CAP
17. TOP COVER
18. ROCKER SHAFT SHIMS
19. OUTER COLUMN
20. INNER COLUMN
21. ABUTMENT WASHER (BURMAN ONLY)
22. FELT BUSH
23. STEERING BOX
24. ROCKER SHAFT BUSH (BURMAN ONLY)
25. RING SEAL
26. WASHER

(iv) The swing lever is located on the rocker shaft by a master spline.

(v) Bleed the clutch system of air, see under "Bleeding the system—Clutch, Section D".

(vi) Top-up the steering unit with lubricant, see under "Filling and topping-up steering unit".

To dismantle and reassemble

1. Clean and mount the steering unit in a vice so the steering column is horizontal.

2. Remove the two springs and damper button through the top cover after removing the spring cap and paper joint by withdrawing two bolts and washers.

3. Remove the top cover, paper joints and shim pack from the steering box by withdrawing four bolts and washers; preserve the shim pack for future use.

4. Remove the guide roller and rocker shaft from the extension of the nut and drain the steering unit of oil.

5. Withdraw the outer column, paper joints and shims over the inner column by removing the three bolts and washers, preserve the shim pack for future use; alternately, remove the end cover, paper joints and shim pack from the lower end of the steering box by withdrawing four bolts and washers, preserve the shim pack for future use.

6. Hold the hand over the upper end of the steering box to trap the steel balls as the steering column is withdrawn a short distance or, alternately over the lower end, to trap the distance piece, bottom ball race and steel balls as the steering column is ejected a short distance; in both instances, the set of steel balls at the opposite end of the worm cam will drop into the steering box and must be retrieved later.

7. Hold the nut steady and withdraw the inner column from the steering box by rotating the inner column in the appropriate direction, withdraw the nut from the steering box and remove the top ball race from the inner column as necessary.

8. Extract the steel balls from the nut and transfer tube, no useful purpose is served by dismantling the nut as replacement parts are not available.

9. Remove the steering box from the vice and retrieve the second set of steel balls, remove the felt bush and abutment washer from the top end of the outer column as necessary; drift out the bottom ball race when it is known to be well worn after collapsing the welch washer, or alternately, remove the top ball race using a long rod through the length of the outer column.

10. Remove the washer and ring seal from the outer end of the rocker shaft housing by relieving the "peening" with a suitable scraper.

11. ***Burman units only:*** Renew the bush in the rocker shaft housing when it is known to be well worn, see under "Rocker shaft bush, Burman—To renew".

12. Reassembly is the reverse of the dismantling sequence but particular attention must be given to the following:—

(i) ***Cam gear units:*** When the rocker shaft bushes are known to be well worn a replacement outer column and steering box must be obtained.

(ii) The fitting of the rocker shaft oil seal is better left until the rocker shaft has been fitted.

(iii) Soak the felt bush in a graphite-based oil for six hours before refitting and ensure that the top end of the inner column does not displace the abutment washer and felt bush from the outer column, ***the Cam Gear unit*** has no abutment washer.

(iv) Check that the nut is a correct match for the worm cam of the inner column, see under "Steering ratio and cam helix—To check".

(v) The steel balls can be retained in the two ball races and nut with Shell Retinax "A" grease.

(vi) Fit the outer column or end cover without any paper joints or shim pack at this juncture and preload the worm cam bearings, see under "Inner column bearings—To preload".

(vii) Refit and centralise the rocker shaft, so its forked lever locates the extension of the nut, follow with the guide roller, paper joints, shim pack and top cover, see under "Rocker shaft endfloat—To check and adjust", refit the damper button and springs.

(viii) Examine the splines on the external end of the rocker shaft and remove all burrs; refit the ring seal and retaining washer by peening over the outer edge of the rocker shaft housing.

(ix) No useful purpose is served by filling the steering unit with lubricant as it can spill out and foul the interior of the car during the fitting sequence, but label it accordingly.

ROCKER SHAFT BUSH (Figs. 3 and 4)

The Burman steering unit has a single bush at the bottom end of the rocker shaft housing which is lubricated by oil direct from the steering box. The bush can be renewed. The Cam Gear steering unit has two bushes, one at each end of the rocker shaft housing, the top bush is lubricated by oil direct from the steering box and the bottom bush lubricated by oil from the steering box through a drilling which breaks out between the two bushes. These bushes cannot be renewed.

To renew (Burman units only)

1. Dismantle the steering unit, see under "Steering unit—To dismantle and reassemble".
2. Remove the washer and ring seal from the outer end of the rocker shaft housing by relieving the "peening" with a suitable scraper.
3. Eject the rocker shaft bush from the rocker shaft housing with a suitable drift.
4. Determine the edge of the bush having the start and finish of the oil groove and press the bush, this end first, into the rocker shaft housing until the opposite end is flush with the bottom of the oil seal recess.
5. Check the diameter and finish of the bush and when necessary ream the bush to $\frac{7}{8}$ in. (22·22 mm.).
6. The refitting of the ring seal is best left until the rocker shaft has been fitted.

INNER COLUMN BEARINGS (Figs. 3 and 4)

Burman units ·0015 in. (·038 mm.) preload

Cam Gear units No perceptible endload whatsoever

The inner column bearings, situated above and below the worm cam, are preloaded by the above amount and this is adjusted by the disposition of shims either between the outer column flange or end cover and the steering box.

It is impracticable to set the preload with the steering unit in the car.

Paper joints and shims for this purpose are available in various thicknesses as given in the "Parts List" for that particular car and steering unit.

To preload

1. Assemble the inner column and nut to the steering box, see under "Steering unit—To dismantle and reassemble"; refit the outer column or end cover without any paper joints or shim pack and "nip up" the three or four bolts.
2. Determine the width of the gap between the outer column flange or end cover and the steering box, subtract the preload specified above and select a shim pack with a paper joint each side to the new dimensions using the previous shim pack as necessary.
3. Remove the outer column or end cover from the steering box and refit together with the selected joint washers and shims between; fully tighten the bolts.

ROCKER SHAFT ENDFLOAT (Figs. 3 and 4)

Burman units ·004 to ·008 in. (·10 to ·20 mm.)

Cam Gear units ·0025 to ·005 in. (·06 to ·12 mm.)

The rocker shaft endfloat is checked with the steering in the straight ahead position and it is set by the disposition of shims between the top cover and the steering box.

The rocker shaft endfloat can be set with the steering unit on the bench or fitted in the car.

Paper joints and shims for this purpose are available in various thicknesses as given in the "Parts List" for that particular car and steering unit.

To check and adjust

1. Fit the swing lever nut to the rocker shaft and with the spring cap, damper springs and button removed from the steering box, mount a dial test indicator on the top cover so the stylus passes through the top cover and bears against the top of the rocker shaft which must be in the straight ahead position, i.e., its mid-point of travel.

2. Move the rocker shaft in or out of the steering box to its fullest extent, by gripping the swing lever nut, and set the dial test indicator to zero; move the rocker shaft in the opposite direction and read the actual endfloat on the dial test indicator.

3. Increase or decrease the endfloat by adding to or subtracting from the existing paper joints and shims to obtain the endfloat specified after removing the top cover by withdrawing four bolts.

Rocker shaft endfloat is checked and reset with the steering unit in the car as follows:—

1. Apply the handbrake, set the front wheels in the straight ahead attitude by setting them parallel to the rear wheels, jack up the front of the car, position a drip tray beneath the steering unit and thoroughly clean the top cover of the steering unit.

2. Remove the spring cap, paper joint, damper springs and button from the top of the rocker shaft inside the steering unit by withdrawing two bolts and washers.

3. Proceed as described in the foregoing paragraphs, 1 to 3.

4. Refit the damper buttons, springs, paper joint and spring cap to the top cover with two bolts and washers.

5. Top-up the steering box with oil, see under "Filling and topping-up the steering unit", clean off any overflow of oil.

FELT BUSH (Figs. 3 and 4)

The felt bush is a strip of special material with oblique cut ends to give the top end of the inner column maximum support within the outer column. It is impregnated with a graphite-based oil to prolong its life and will normally require no attention.

Should the felt bush wear, inefficient cancelling of the direction indicator switch or rattling may result and the felt bush must be renewed; when a squeak develops, lubricate with a few drops of graphite-based oil.

To renew

1. Remove the steering column cowling, horn ring, steering wheel, direction indicator switch and striker from the top ends of the steering columns, see under those respective headings.

2. Using a small probe, locate the join in the felt bush and prise the small end upwards; once the point of the felt bush is proud of the outer column, the remainder can be extracted with a pair of pliers; the abutment washer of Burman units will remain *in situ*.

3. While the felt bush is dry, chamfer one of the bottom edges and soak in a graphite-based oil for six hours.

4. Form the felt bush round the inner column, chamfer edge downwards and inwards; work downwards between the inner and outer columns with a small probe until its top edge is ·25 in. (6·35 mm.) below the top of the outer column.

5. Refit the direction indicator striker, switch, steering wheel, horn ring and steering column cowlings, see under those respective headings.

STEERING RATIO AND WORM CAM HELIX (Fig. 5.)

	Ratio	*Lead*
Alpine	14 : 1	·700 in. (17·79 mm.)
Minx, Gazelle, Super Minx, Vogue, Rapier, Sceptre	16·4 : 1	·625 in. (15·88 mm.)

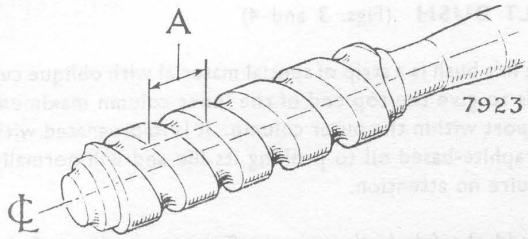

Fig. 5 *The worm cam end of the inner column showing method of determining the steering ratio. Measure the lead "A" parallel to worm gear centre line.*

It is imperative that the nuts are not interchanged from one ratio inner column to another as steering failure will result.

To check

To determine the ratio of any inner column, measure the lead of the helix and compare with those specified. The lead of the helix is the "travel" of one turn, measured parallel to its axis along the worm cam.

To determine the ratio of the nut, read the three figures stamped on its body and compare with the specified lead and then read the ratio given on the same line. The nut of the 14 : 1 ratio nut accommodates fourteen steel balls while the nut of the 16·4 : 1 ratio only thirteen steel balls.

The right-hand drive steering unit has a worm cam with a left-hand helix while the left-hand drive steering unit has a right-hand helix. When the steering wheel is rotated clockwise, whether on right- or left-hand drive cars, the swing lever will rotate in an anti-clockwise direction when viewed through the engine compartment.

BURMAN ADJUSTABLE STEERING UNIT

Fig. 6.

The Burman adjustable steering unit is of the recirculating ball type and has the outer column attached to the steering box by a flange and three bolts. An extension piece fitted inside the inner column, provides 2½ in. (63·5 mm.) variation in the height of the steering wheel.

The bottom end of the inner column is similar to that of the rigid units but its tubular upper end is swaged out and the inner surface splined to accommodate the splined extension piece. The outer end of the splined extension piece has a taper, parallel splines and a thread on which to mount the steering wheel.

The splined extension piece is retained and its upward and downward travel limited by the protruding end of a dowel, pressed into the swaged end of the inner column, locating an axial groove machined in the splined extension piece. The latter is slotted at the bottom end and has an internal taper to accommodate the cross dowel and male taper of the expander bolt fitted through its centre.

An expander bolt extension is fitted on the protruding end of the expander bolt and the steering wheel adjusting nut is located by two flats and secured by a bolt. The expander bolt extension has a small flange on its bottom end which will bear against the underside face of the horn ring and releases the expander bolt as the steering wheel adjusting nut is slackened off.

A nylon circlip, fitted on the protruding end of the expander bolt and beneath the expander bolt extension prevents the expander bolt dropping out of the splined extension piece when the expander bolt extension is removed. The inner column is plugged with a rubber bung to prevent the expander bolt dropping into the hollow centre of the inner column should ever the nylon circlip be inadvertently removed.

The inner column is supported in the outer by a spring-loaded ball bearing assembly.

To remove and refit

The removal and refitting sequence for the adjustable steering unit are identical to those of the rigid unit, see under "Steering unit—To remove and refit" (Rigid and adjustable steering units).

To dismantle and reassemble

The dismantling and assembly sequence for the adjustable steering unit are similar to those of the rigid unit with the flanged outer column but with the following additional operations:—

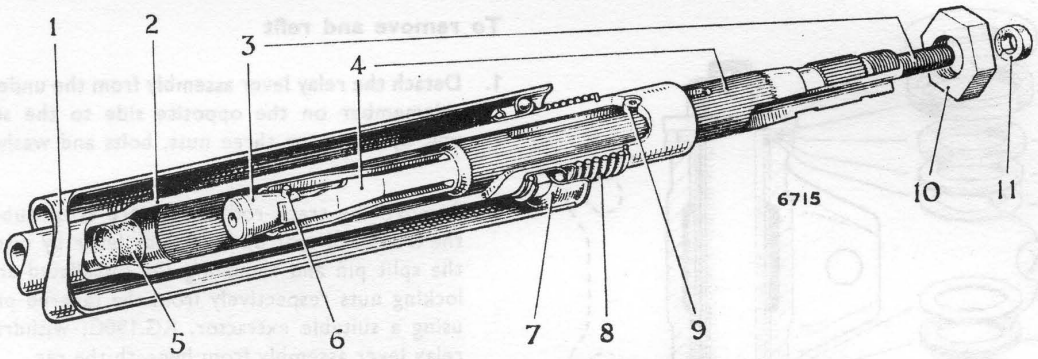

Fig. 6 *Cut-away section of adjustable steering column.*

1. OUTER COLUMN
2. INNER COLUMN
3. EXPANDER BOLT
4. SPLINED EXTENSION PIECE
5. RUBBER BUNG
6. CROSS DOWEL
7. BALL BEARING RACE
8. SPRING AND CIRCLIP
9. DOWEL
10. STEERING WHEEL NUT
11. NYLON CIRCLIP

1. Before dismantling the steering box, remove the ball bearing assembly from the top end of the outer column by removing the circlip and spring from the inner column.

2. Withdraw the splined extension piece complete with expander bolt from the inner column by extracting and subsequently discarding the dowel; when there are two dowel holes, identify the dowel hole in use. A tapped hole, to facilitate extraction, is provided in the centre of the dowel.

3. Withdraw the expander bolt from the splined extension piece by removing the nylon circlip.

4. No useful purpose is served by removing the rubber bung from inside the inner column.

5. Reassembly is the reverse of the dismantling sequence but particular attention must be given to the following:—

   (i) Check the presence of the rubber bung inside the inner column, its correct position is just below the bottom of the swaging.

   (ii) Smear the tapered end of the expander bolt, the splines in the inner column and the splined extension piece with Shell Retinax "A" Grease.

   (iii) The expander bolt is fed into the splined extension pieces so the cross dowel, through its tapered end, locates two cuts in the splined end of the splined extension piece, fit the nylon circlip just below the protruding thread of the expander bolt.

   (iv) The splined extension piece is fed into the inner column so its groove aligns with the identified dowel hole, check that it is a sliding fit. When a replacement inner column is being fitted use the dowel hole which will produce a dimension of ·852 to ·907 in. (21·64 to 23·04 mm.) between the centre of the dowel hole and the wider end of the steering wheel mounting taper when the splined extension piece is in the lowest position.

   (v) A new dowel must be used, but it must not destroy the free movement of the splined extension piece.

Should it be necessary, the adjustable section in the top of the inner column can be dismantled with the steering unit remaining in the car in the following manner:—

1. Remove the steering column cowling, direction indicator switch, horn ring and steering wheel, see under those respective headings.

2. Proceed with operation No. 2 onwards of the foregoing sequence.

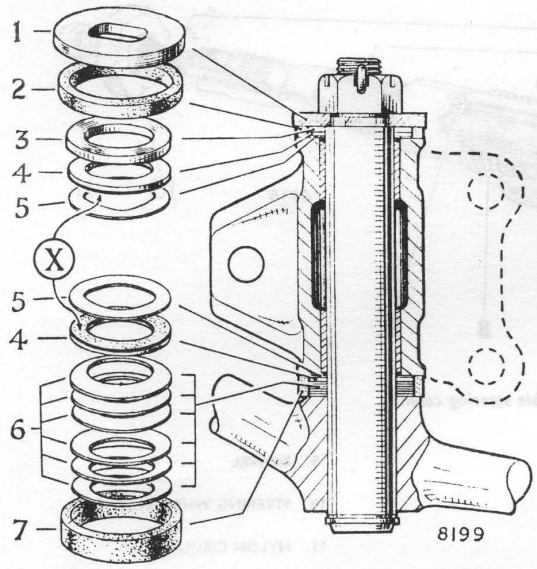

Fig. 7 *Cross section-through steering relay lever assembly and exploded view of bearing and Belleville washers.*

1. THRUST WASHER
2. NARROW SEALING RING
3. DISTANCE PIECE
4. P.T.F.E. washer
5. BEARING WASHER
6. BELLEVILLE WASHER PACK
7. LARGE SEALING RING

"X" P.T.F.E. SURFACES

RELAY LEVER ASSEMBLY

Fig. 7.

The relay lever is fitted on the opposite side to the steering unit and relays the steering movement of the front wheel nearest the steering unit to the opposite front wheel.

The rear end of the swing lever of the steering unit is connected to the rear end of the relay lever by a centre cross tube and movement is transferred to the front wheel by a short track rod fitted to the front end of the relay lever.

The circlip on the bottom end of the fulcrum pin is a safety measure and no useful purpose is served by removing it.

The bearings in the support bracket and particular washers above and below the support bracket have P.T.F.E.-coated bearing surfaces and the assembly will not require periodical lubrication in service.

To remove and refit

1. Detach the relay lever assembly from the underframe sidemember on the opposite side to the steering unit by removing three nuts, bolts and washers.

2. Remove the track rod and centre cross tube from the front and rear ends of relay lever by discarding the split pin and removing the castellated and self-locking nuts respectively from the tapered pins and using a suitable extractor, RG.190C; withdraw the relay lever assembly from beneath the car.

3. Refitting is the reverse of the removal sequence but particular attention must be given to the following:—

   (i) Set the front wheels in the straight ahead attitude by positioning them parallel to the rear wheels and fit the centre cross tube to the rear end of the relay lever.

   (ii) The heads of the three attachment bolts are positioned under the front wheel arch.

   (iii) Check the front wheel alignment, see under "Front wheel alignment—To check Front Suspension, Section F", and fit a new split pin to the castellated nut of the ball pin.

To dismantle and reassemble

1. Identify the relay lever to the nearest end of the support bracket, withdraw the relay lever and fulcrum pin assembly from the support bracket by discarding the split pin and removing the castellated nut, thrust washer, narrow sealing ring, distance piece, P.T.F.E. and bearing washers from the top of the support bracket.

2. Remove the support bracket, wider sealing ring, bearing and P.T.F.E. washers, followed by the Belleville washer pack from the fulcrum pin.

3. As the fulcrum pin is a heavy interference fit in the relay lever, no useful purpose is served by separating them.

4. Drift the two bush bearings out of the support bracket when they are known to be well worn.

5. Reassembly is the reverse of the dismantling sequence but particular attention must be given to the following:—

(i) Renew the two bush bearings, see under "Bush bearings—To renew"; it is important that the prefinished P.T.F.E. bearing surface is not damaged.

(ii) Ensure that the upper end of the fulcrum pin is free from burrs. When the fulcrum pin is well worn a new fulcrum pin and relay lever must be fitted.

(iii) Coat all parts with Shell Retinax "A" grease during assembly.

(iv) In the interests of good steering it is advisable to fit a new pack of Belleville washers; assemble the six Belleville washers into two parallel packs of three each and place together so the raised outer edges are in contact with one another and feed onto the fulcrum pin.

(v) The thicker sealing ring is fitted to the bottom end of the fulcrum pin to protect the Belleville washers, the thinner sealing ring is fitted to the top end.

(vi) The treated (dark) side of the P.T.F.E. washers abut to the bearing washers and the bearing washers abut to the top and bottom faces of the support bracket.

(vii) Feed the fulcrum pin into the support bracket so the bottom front bolt hole is adjacent to the short end of the relay lever.

(viii) Load the Belleville washer pack by tightening the castellated nut to a torque of 60 lbs. ft. (8·3 kg.m.) and slackening off 1½ flats, fit a new split pin; when the split pin hole and nut do not align, **slacken off** the castellated nut to effect alignment.

BUSH BEARINGS (Fig. 7)

To renew

The relay lever bush bearings are of the P.T.F.E. type and they will require no periodical lubrication, however, during the assembly sequence of the relay lever assembly, Shell Retinax "A" grease must be applied.

1. Dismantle the relay lever assembly, see under "Relay lever assembly—To dismantle and reassemble".
2. Eject the two bush bearings from the support bracket with a suitable drift.
3. Press the two bush bearings into the support bracket using a suitable tool until the outer edges of both bush bearings are just below the top and bottom faces of the support bracket. It is important that the P.T.F.E. bearing surface is not disturbed by the press tool.
4. Reassemble the relay lever assembly using Shell Retinax "A" grease.

STEERING LINKAGE

CENTRE CROSS TUBE

The centre cross tube connects the rear ends of the steering unit swing lever and relay lever and passes behind the cylinder block above the clutch bell housing.

The centre cross tube is of a fixed length with a tapered pin at both ends each mounted in a rubber bush, the taper pins and rubber bushes cannot be renewed but their life is considerable providing they are not under any torsional stress when the steering is in the straight ahead attitude.

To remove and refit

1. Remove the centre cross tube from the steering unit swing lever and relay lever by removing the two nuts from the tapered pins and using a suitable extractor, RG.190C.
2. Refitting is the reverse of the removal sequence but particular attention must be given to the following:—
   (i) Set both front wheels in the straight ahead attitude by positioning them parallel to the rear wheels and fit the tapered pins to the swing and relay levers, this will ensure that the rubber bushes are not under any torsional strain.

(ii) Check the front wheel alignment, see under "Front wheel alignment—Front suspension, Section F".

TRACK RODS

The two track rods, which are symmetrical, connect the front ends of the steering unit swing lever and the relay lever with the steering arms mounted on the stub axle carrier.

For the purpose of setting front wheel alignment the length of the track rods is adjustable and it is important that the length of both track rods is equal otherwise the wheel lock and Ackerman angles will be incorrect.

The track rod has a ball joint at each end and these are threaded left or right hand; thus by releasing the locknuts and rotating the centre tube, the length of the track rod can be altered without removing any of the ball joints from the swing or relay levers and steering arm.

To remove and refit

1. Remove the ball joints from the steering unit swing lever or relay lever and steering arm by discarding the split pins, removing the castellated nuts and extracting the tapered ball pins with a suitable extractor, RG.190C.
2. Refitting is the reverse of the removal sequence but particular attention must be given to the following:—

   (i) Check that the length of the two track rods and set them equal, set the two tapered ball pins in opposite directions but do not fully tighten the locknuts at this juncture.

   (ii) The left-hand threaded ball joint is fitted to the steering arm so the tapered ball pin points downward.

   (iii) Lock the castellated nuts with new split pins.

   (iv) Check the front wheel alignment and Ackerman angles, see under those respective headings in "Front suspension, Section F". Both track rods must be of the same length.

   (v) When working from the side of the car and with the left-hand threaded ball joint fitted to the steering arm, rotate the centre tube:—

   Anti-clockwise to lengthen

   Clockwise to shorten.

   When working beneath the car, the rotation will be in the opposite direction.

BALL JOINTS

To remove and refit

1. Grip the ball joint socket and slacken off the locknut.
2. Detach the ball joint from the steering arm, swing or relay levers by discarding the split pin, removing the castellated nut and extracting the tapered ball pin using a suitable extractor, RG.190C.
3. Remove the ball joint from the centre of the track rod by rotating it in the appropriate direction.
4. Refitting is the reverse of the removal sequence but particular attention must be given to the following:—

   (i) The left-hand threaded ball joint is fitted to the steering arm, the right-hand threaded ball joint is fitted to the swing or relay levers.

   (ii) Lock the castellated nut with a new split pin.

   (iii) Check the front wheel alignment and Ackerman angles, see under those respective headings in "Front suspension, Section F".

   (iv) Ensure that the ball joint socket is centrally disposed on its tapered ball pin when in the fitted position.

Ball joint cover—To renew

The ball joint cover is made of rubber, it is a tight fit on the tapered ball pin and secured to the ball joint socket either by a circlip or an endless spring. The cover is available as a replacement part and can be renewed when it has deteriorated or become damaged. However, when the deterioration or damage is of long standing, road dirt may have penetrated to between the bearing surfaces, thus it will be more satisfactory to fit a new ball joint.

1. Detach the ball joint from the steering unit swing lever, relay lever or steering arm by discarding the split pin, removing the castellated nut and extracting the tapered ball pin with a suitable extractor, RG.190C.

2. Remove the cover from the ball joint by releasing the circlip or endless spring, in the latter instance a washer will be under the cover.

3 Refitting is the reverse of the removal sequence but particular attention must be given to the following:—

   (i) Ensure that the ball joint socket is centrally disposed on its tapered ball pin when it is in the fitted position.

Ball joint—To check wear

The ball joint is a sealed unit and requires no lubrication. It consists of a socket which houses a tapered ball pin, bearing cups and a spring. It is protected from road dirt by a rubber cover.

1. Grip the ball joint socket and attempt to move it up and down on its tapered ball pin. When any clearance is evident a new replacement must be fitted.

2. While an assistant moves the steering wheel from side to side a short distance, observe the sideways movement between the ball joint socket and the tapered ball pin. When any sideways movement is detected a new replacement must be fitted.

STEERING ARM

To remove and refit

The steering arms are mounted on the inside face of the stub axle carriers and point to the rear of the car, the rear attachment bolts also secure the top lug of the brake calipers.

1. Detach the ball joint of the outer track rod from the steering arm by discarding the split pin, removing the castellated nut and extracting the tapered ball pin using a suitable extractor, RG.190C.

2. Remove the steering arm from the stub axle carrier by withdrawing two bolts and slackening off the bottom caliper bolt which is then retightened to hold the brake caliper in position.

3. Refitting is the reverse of the removal sequence but particular attention must be given to the following:—

   (i) The steering arm is fitted so it points rearward and with the small end of the tapered hole downward.

   (ii) Check the front wheel alignment and Ackerman angles, see under those respective headings in "Front suspension, Section F".

DIAGNOSIS OF STEERING FAULTS

Steering faults can arise from causes other than incorrect front suspension angles and steering alignment or accident damage. The more common causes of bad steering are as follows:—

1. Lack of lubricant in steering unit.
2. Incorrectly adjusted steering unit.
3. Loose steering unit or relay lever assembly.
4. Wear in steering linkage.
5. Under-inflated tyres.
6. Unequally worn tyres.
7. Tyres of different tread pattern.
8. Road wheels out of balance.
9. Incorrect endfloat setting in front hubs.
10. Faulty shock absorbers.
11. Defective road springs.
12. Mis-alignment of rear axle.