REAR SUSPENSION

CONTENTS

(14 Pages)

REAR SUSPENSION

GENERAL

The rear suspension is by means of two semi-elliptic springs which are secured to the rear axle casing.

Both spring eyes and the rear shackle bracket are fitted with bonded rubber bushes. Thrust buttons are interposed between the leaf ends which are held in alignment by rubber lined bundle clips.

On later Rapier and Alpine III cars, an eccentric rubber bush is fitted in the front spring eye.

The rear suspension is damped hydraulically. On Rapier, Girling telescopic dampers are used. On Alpine, I and II Armstrong lever type dampers are fitted.

Bump and rebound checking is by means of a rubber abutment and on Alpine I and II cars, a Balata strap as well.

Alpine III have telescopic dampers and no Balata strap.

REAR SPRING

To remove

Jack up the car and support it by means of chassis stands or suitable blocks of wood placed under the chassis frame just forward of the front eyes of the springs.

Remove the road wheel on that side of the car from which the spring is to be removed.

Clean the projecting threads of the 'U' bolts, dampers, and mounting bolts, using a wire brush and oil with paraffin or penetrating oil.

Remove shock absorber.

Remove Nyloc securing nuts and washers from 'U' bolts. Jack up rear axle until it is parted from the spring and support it with suitable blocks of wood.

Remove 'U' bolts.

Tap out lower shackle pin and shakeproof washer after removing nut with washer, and lower rear end of spring to floor.

Remove the front pivot pin in a similar manner to the lower shackle pin.

The spring is now free to be taken away.

To refit

Refitting is a direct reversal of the preceding operation.

The final tightening of the spring "U" bolts, shackle assemblies and pivot pins should be carried out after the removal of the jacks and stands, the car standing unladen on the road wheels.

This ensures that the spring eyes are not subject to excessive twist when in the bump or rebound position.

Tighten the "U" bolt nuts to the figures given in General Data

To dismantle

Remove spring—(See preceding operation).

Before dismantling mark one end of each leaf with a centre punch. This ensures that the leaves are replaced in the position they occupied prior to dismantling.

Remove the bundle clips. To do this first remove the bolts and carefully open out each clip a sufficient amount to enable the clip to be removed from the spring. Do not damage or lose the rubber packing.

Grip the spring securely in a vice, holding it by bottom and top leaves.

Unscrew dowel bolt and replace with a suitable length of M.S. rod of same diameter as the dowel bolt.

Release vice and leaves will separate.

Remove thrust buttons.

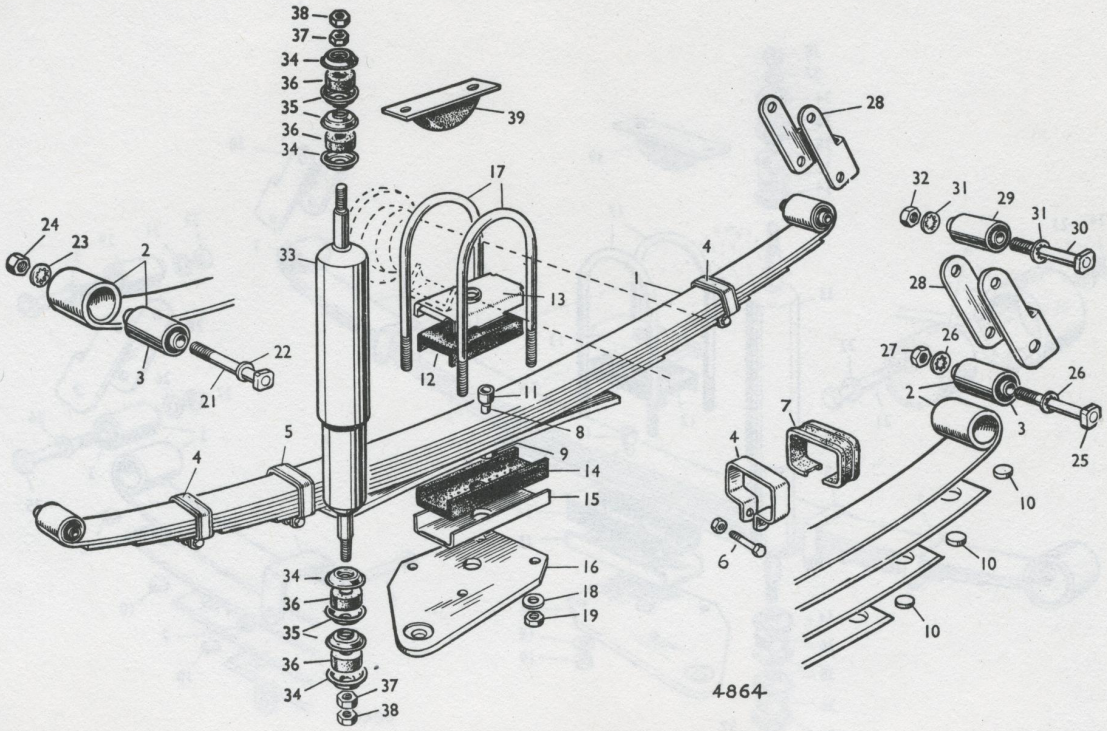

Fig. 1. *Exploded view of Rapier rear suspension (without eccentric bush)*

1 Rear spring.
2 Main leaf.
3 Spring eye bush.
4 Bundle clip.
5 Bundle clip.
6 Bolt and nut securing bundle clip to spring.
7 Rubber lining.
8 Dowel bolt.
9 Dowel bolt securing nut.
10 Thrust button.
11 Dowel bolt sleeve.
12 Top clamp rubber.
13 Rubber retainer.
14 Bottom clamp rubber.
15 Rubber retainer.
16 Clamp plate.
17 'U'-bolt.
18 Washer.
19 Nyloc nut.
} securing spring to axle casing.

21 Pivot Pin
22 Washer
23 Washer.
24 Nut.
} front spring eye to frame.

25 Shackle pin.
26 Washer.
27 Nut.
} rear spring eye to frame.

28 Shackle.
29 Shackle bush.

30 Shackle pin.
31 Washer.
32 Nut.
} shackle to frame.

33 Shock absorber.

34 Retaining washer.
35 Separating washer.
36 Rubber washer.
37 Nut.
38 Locknut.
} securing shock absorber to frame and axle.

39 Rubber abutment (bump stop).

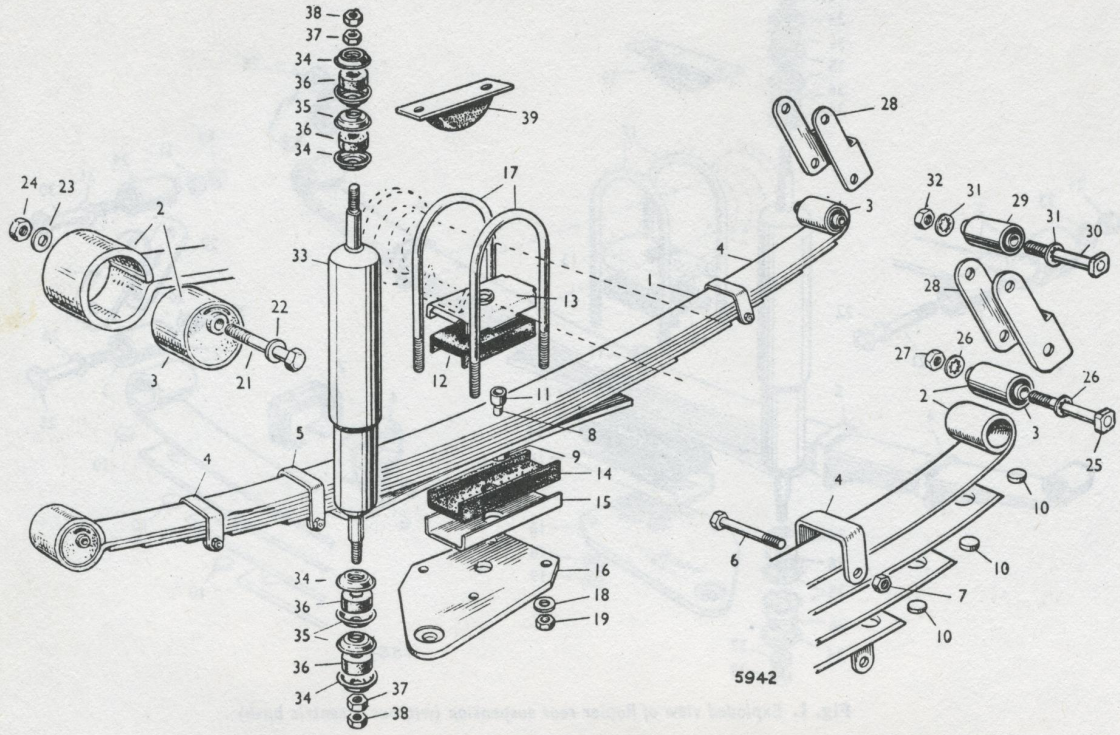

Fig. 2. *Exploded view of rear suspension (with eccentric bush)*

1 Rear spring.
2 Main leaf.
3 Spring eye bush.
4 Bundle clip.
5 Bundle clip.
6 Bolt and nut securing bundle clip to spring.
7 Rubber lining.
8 Dowel bolt.
9 Dowel bolt securing nut.
10 Thrust button.
11 Dowel bolt sleeve.
12 Top clamp rubber.
13 Rubber retainer.
14 Bottom clamp rubber.
15 Rubber retainer.
16 Clamp plate
17 'U'-bolt.
18 Washer.
19 Nyloc nut.
} securing spring to axle casing.

21 Pivot Pin
22 Washer
23 Washer.
24 Nut.
} front spring eye to frame.

25 Shackle pin.
26 Washer.
27 Nut.
} rear spring eye to frame.

28 Shackle.
29 Shackle bush.

30 Shackle pin.
31 Washer.
32 Nut.
} shackle to frame.

33 Shock absorber.

34 Retaining washer.
35 Separating washer.
36 Rubber washer.
37 Nut.
38 Locknut.
} securing shock absorber to frame and axle.

39 Rubber abutment (bump stop).

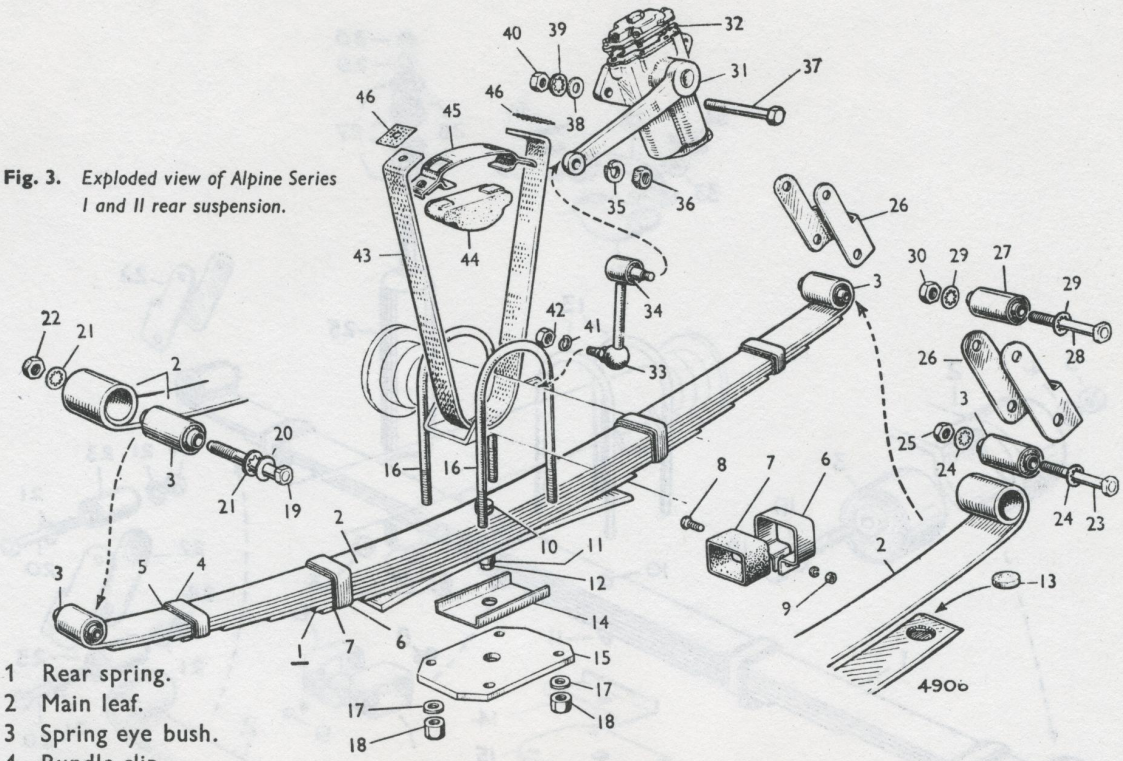

Fig. 3. *Exploded view of Alpine Series I and II rear suspension.*

1 Rear spring.
2 Main leaf.
3 Spring eye bush.
4 Bundle clip.
5 Rubber lining.
6 Bundle clip.
7 Rubber lining.
8 Bolt. } securing bundle.
9 Nut. } clip to spring.
10 Dowel bolt.
11 Dowel bolt locating collar.
12 Dowel bolt securing nut.
13 Rubber thrust button.
14 Location plate. } securing spring to axle casing.
15 Clamp plate.
16 'U'-bolt.
17 Washer.
18 Nyloc nut.
19 Pivot pin. } front spring eye to frame.
20 Washer.
21 Washer.
22 Nut.
23 Shackle pin. } rear spring eye to frame.
24 Washer.
25 Nut.
26 Shackle.
27 Shackle bush.
28 Shackle pin. } Shackle to frame.
29 Washer.
30 Nut.
31 Shock absorber.
32 Gasket.
33 Link.
34 Rubber bush—link.
35 Washer. } link to shock absorber.
36 Nut.
37 Bolt.
38 Washer. } shock absorber to frame.
39 Washer.
40 Nut.
41 Washer. } link to rear axle.
42 Nut.
43 Rebound strap.
44 Rubber abutment (bump stop).
45 Abutment bracket.
46 Lockwasher.

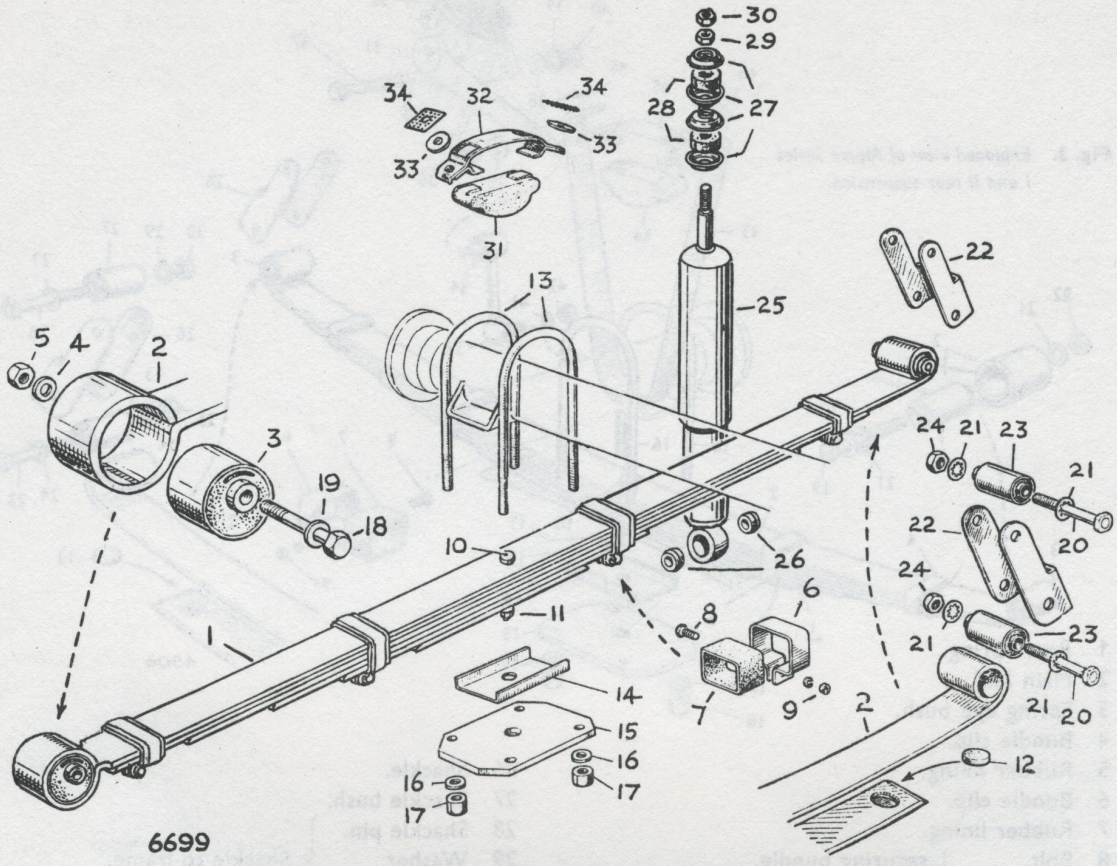

Fig. 1. *Components of the rear suspension Alpine III*

1. REAR SPRING
2. MAIN LEAF
3. BUSH, SPRING EYE
4. WASHER
5 NUT
6. CLIP
7. RUBBER LINER
8. BOLT
9. NUT
10. DOWEL BOLT
11. NUT
12. THRUST BUTTON
13. "U" BOLT
14. LOCATION PLATE
15. CLAMP PLATE
16. WASHERS
17. NYLOC-NUTS
18. PIVOT PIN
19. WASHER
20. SHACKLE PINS
21. WASHERS
22. SHACKLE ASSEMBLY
23. BUSH
24. NUTS
25. SHOCK ABSORBER
26. BOTTOM BUSHES
27. RETAINING WASHERS
28. RUBBER BUSHES
29. NUT
30. LOCK NUT
31. BUMP RUBBER
32. ABUTMENT BRACKET
33. PACKING PIECE
34. LOCK WASHER

Examination

Clean the spring leaves thoroughly using paraffin.

Check thrust buttons for excessive wear and, if necessary, replace with new ones.

The spring leaves should be examined for cracks, particularly if one of them is fractured.

A crack will often show due to exudation of paraffin along the line of the crack.

All faulty leaves should be replaced by new ones.

The "setting up" of spring leaves is not recommended and in the case of a weak spring a new or factory reconditioned assembly should be fitted.

To rebuild

Before rebuilding the spring the leaves should be thoroughly lubricated with graphite grease.

Rebuilding is the reversal of the dismantling instructions, but alignment of the leaves will be greatly facilitated if a length of steel rod of suitable diameter is inserted through the dowel bolt hole, otherwise damage to the threads of the dowel bolt may occur.

When the leaves have been fully pressed home the rod should be removed, the dowel bolt fitted, and the nut tightened. Carefully refit the bundle clips together with the rubber packing. The clamp bolt should not be over-tightened as damage to the rubber packing and distortion of the clip may result.

Before refitting the spring to the chassis, check that the leaves are lying flush on each other.

Bushes may be pressed out of the spring or frame for renewal purposes.

The use of a suitable withdrawal tool is recommended.

Front eye bush (eccentric type)

If a new front eye bush is fitted it is imperative that it is pressed in so that the pivot pin location is at the top of the spring eye.

A tolerance of $\pm \frac{1}{32}$ in. (·8mm) must not be exceeded. To ensure that this is maintained, the spring should be scribed as shown at (A) in Fig. 4 before fitting.

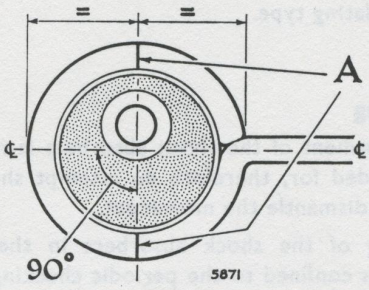

Fig. 4. *Method of marking spring eye.*

To check rear spring camber

Spring camber is the difference height in between the top of the master leaf and a straight line joining the spring eye centres.

As will be appreciated this varies according to the weight carried in the vehicle.

In order to check the rear spring laden camber LOAD THE VEHICLE BY PLACING WEIGHTS TO THE VALUE SHOWN IN THE GENERAL DATA SECTION UNDER THE HEADING "REAR SUSPENSION".

Stretch a length of thread between the spring eye centres and measure the distance between the top of the master leaf and the thread.

Positive camber means that the line of the thread will be ABOVE the main leaf of the spring. Reverse or negative camber means that the line of the thread will be BELOW the main leaf.

For correct spring camber see "General Data" at the beginning of the manual.

SHOCK ABSORBERS

ALPINE I and II

The suspension is controlled by Armstrong hydraulic shock absorbers, which are of the double-acting self-regulating type.

Servicing

No adjustment of the shock absorbers is required or provided for, therefore no attempt should be made to dismantle the movement.

Servicing of the shock absorbers in the Home market is confined to the periodic checking of the securing bolts.

Normally no periodical replenishment of the fluid is required, but if for any reason "topping up" is found to be necessary, the shock absorber must be removed from the car.

It is recommended, however, especially overseas, that the fluid level is checked at the same time as the securing bolt check is carried out.

Testing

When there is any suggestion of the suspension being inadequately damped, the condition of the road springs and the tyre pressures should also be checked.

If the shock absorbers do not appear to function satisfactorily, an indication of their resistance can be obtained by carrying out the following check:—

Remove the shock absorbers from their mountings.

Place the shock absorber in a vice (holding it by the fixing lugs to avoid distortion of the cylinder Body).

Before carrying out the check, work the shock absorber through six to eight strokes to expel any air present in the compression chamber.

Move the arm up and down through one complete cycle. A moderate resistance throughout the full stroke should be felt. If, however, the resistance is erratic and free movement of the lever arm is noted, it may indicate a lack of fluid.

If the addition of fluid (added as described below) gives no improvement, a new shock absorber should be fitted.

Too much resistance, *i.e.*, when it is not possible to move the lever slowly by hand, probably indicates a broken internal part or a seized piston; in which case the shock absorbers should be changed.

Topping up the fluid

Remove the shock absorber from its mounting.

Before removing the filler plug, carefully clean the exterior of the shock absorber especially in the vicinity of filler plug boss.

(This is important as it is essential that no dirt or foreign matter enters the operating chamber).

Use only Armstrong Shock Absorber Fluid No. 624.

Whilst adding fluid the lever arm should be worked through its full stroke to expel any air from the operating chamber.

Fill the body with fluid to the bottom of the filler hole threads.

After refitting the shock absorber to its mounting, but before reconnecting the link, it is advisable to work the lever arm a few times through the full stroke to ensure that no air is present.

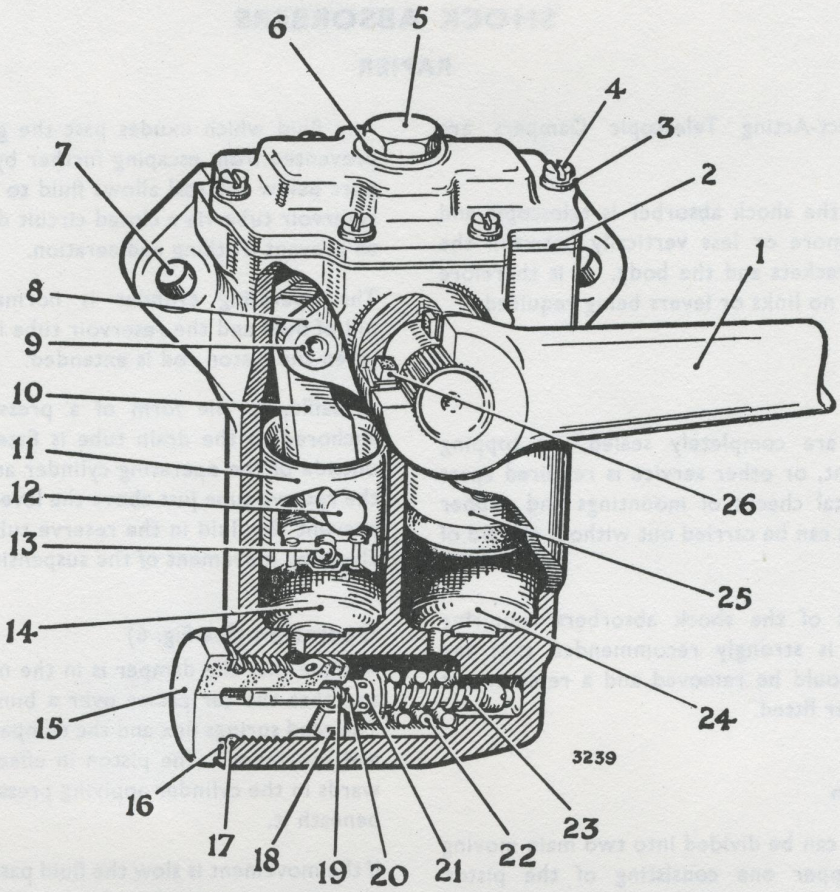

Fig. 5. *The Armstrong hydraulic shock absorber*

1 Arm.
2 Gasket.
3 Shakeproof washer.
4 Lid screw.
5 Filler plug.
6 Filler plug washer.
7 Mounting holes.
8 Crank plate.
9 Crank pin.
10 Connecting rod.
11 Compression piston.
12 Piston pin.
13 Recuperation valve.
14 Compression or bump cylinder.
15 Valve screw.
16 Valve screw compression washer.
17 Rubber 'O' ring.
18 Valve screw inner seal.
19 Rebound valve.
20 Leak groove.
21 Compression valve.
22 Compression spring.
23 Rebound spring.
24 Rebound cylinder.
25 Rebound piston.
26 Gland packing.

SHOCK ABSORBERS

RAPIER

Girling Direct-Acting Telescopic Dampers are fitted.

The body of the shock absorber is telescopic and is mounted more or less vertically between the spring pad brackets and the body. It is therefore direct-acting, no links or levers being required.

Servicing

These units are completely sealed, no topping up, adjustment, or other service is required apart from periodical checks of mountings and rubber bushes, which can be carried out without the aid of special tools.

In the event of the shock absorbers requiring attention, it is strongly recommended that the faulty unit should be removed and a replacement shock absorber fitted.

Construction

The assembly can be divided into two main moving parts, the upper one consisting of the piston rod with the piston attached to its lower end and the outer tubular shroud attached at the top just below the stem. The lower part consists of a cylinder and an outer reservoir tube which terminates in a base cup and is welded to the stem, and at its upper end is a welded cap. This cap forms part of an assembly which houses the seal on the piston rod, compresses the static seal rubber, and locates the piston rod bearing—usually referred to as the piston rod guide. The piston rod seal is of synthetic rubber and has multi-wiping lips and all except one, face inwards. The outer lips act to exclude dirt, etc., and faces outwards.

Any fluid which exudes past the guide bearing is prevented from escaping further by the seal and a port below the seal allows fluid to return into the reservoir tube via a closed circuit drain tube fitted to prevent frothing and aeration.

The operating cylinder is normally completely full of fluid and the reservoir tube is about half full when the piston rod is extended.

A baffle, in the form of a pressed steel collar anchored to the drain tube is fitted between the outside of the operating cylinder and the inside of the reserve tube just above the level of the fluid, to prevent the fluid in the reserve tube being shaken about by movement of the suspension.

Operation (See Fig. 6)

Assume that the damper is in the midway position and that the car passes over a bump in the road. The road springs flex and the damper is compressed and shortened. The piston in effect moves downwards in the cylinder applying pressure to the fluid beneath it.

If the movement is slow the fluid passes through the metering restriction in the valve disc (A) and enters the upper part of the cylinder.

If the movement is fast the fluid passes through the spring-controlled compression valve also at (A) which is quite lightly loaded. The ported sleeve in the piston remains closed.

Downward movement of the piston displaces a greater volume of fluid than the lesser volume above the piston. Hence during a slow movement the excess can find a restricted way out to the reservoir via a groove machined in the valve disc of the compression valve assembly (B) in the base

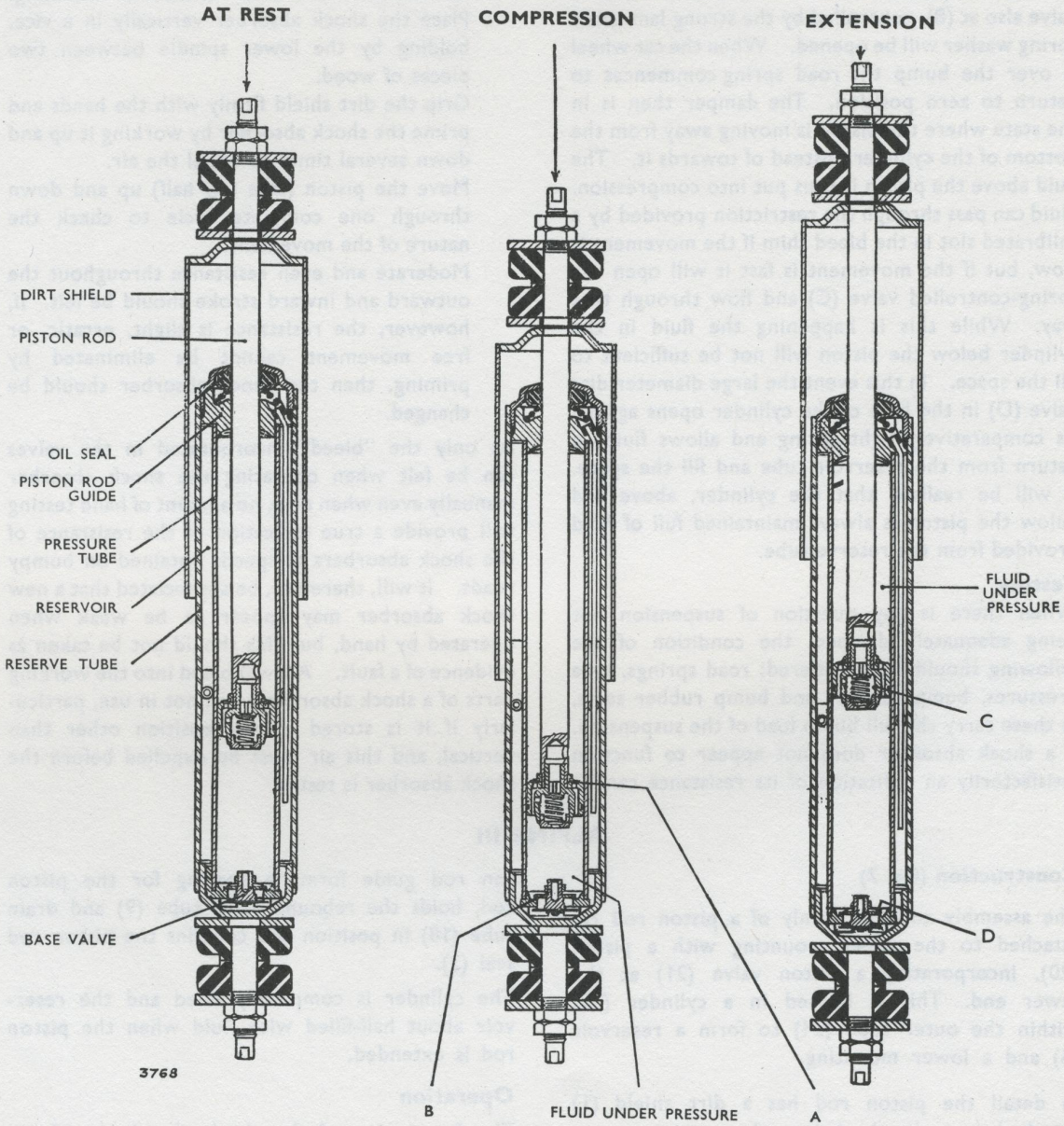

Fig. 6. *Diagrammatic sections of telescopic shock absorbers.*

of the cylinder. If, however, the downward movement of the piston is a fast one the slotted sleeve valve also at (B), controlled by the strong laminated spring washer will be opened. When the car wheel is over the bump the road spring commences to return to zero position. The damper then is in the state where the piston is moving away from the bottom of the cylinder, instead of towards it. The fluid above the piston is thus put into compression. Fluid can pass through the restriction provided by a calibrated slot in the bleed shim if the movement is slow, but if the movement is fast it will open the spring-controlled valve (C) and flow through that way. While this is happening the fluid in the cylinder below the piston will not be sufficient to fill the space. In this event the large diameter disc valve (D) in the base of the cylinder opens against its comparatively light spring and allows fluid to return from the reservoir tube and fill the space. It will be realised that the cylinder, above and below the piston is always maintained full of fluid provided from the reserve tube.

Testing

When there is any question of suspension not being adequately damped, the condition of the following should be considered: road springs, tyre pressures, bump rubbers and bump rubber seats, as these carry the full bump load of the suspension. If a shock absorber does not appear to function satisfactorily an indication of its resistance can be obtained by carrying out the following check:—

Remove the shock absorber from its mounting.

Place the shock absorber vertically in a vice, holding by the lower spindle between two pieces of wood.

Grip the dirt shield firmly with the hands and prime the shock absorber by working it up and down several times to expel the air.

Move the piston (free top half) up and down through one complete cycle to check the nature of the movement.

Moderate and even resistance throughout the outward and inward stroke should be felt. If, however, the resistance is slight, erratic, or free movement cannot be eliminated by priming, then the shock absorber should be changed.

As only the "bleed" incorporated in the valves can be felt when operating the shock absorber manually even when new, no amount of hand testing will provide a true indication of the resistance of the shock absorbers at speeds obtained on bumpy roads. It will, therefore, be appreciated that a new shock absorber may appear to be weak when operated by hand, but this should not be taken as evidence of a fault. Air will bleed into the working parts of a shock absorber when not in use, particularly if it is stored in any position other than vertical, and this air must be expelled before the shock absorber is tested.

ALPINE III

Construction (Fig. 7)

The assembly consists mainly of a piston rod (2) attached to the upper mounting with a piston (20), incorporating a piston valve (21) at the lower end. This is housed in a cylinder (25) within the outer tube (24) to form a reservoir (6) and a lower mounting.

In detail the piston rod has a dirt shield (1) attached immediately below the upper mounting. The cylinder (25) is located at the end by a spigot on the piston rod guide (17) which in turn is housed in the outer tube (24). This piston rod guide forms a bearing for the piston rod, holds the rebound valve tube (9) and drain tube (18) in position and contains the piston rod seal (3).

The cylinder is completely filled and the reservoir about half-filled with fluid when the piston rod is extended.

Operation

The functioning of the shock absorber with its principle of "one-way" oil circulation, is described with references to the illustration.

As the wheel rises on fast bump strokes, when

the piston is moving relatively towards the foot valve (13) fluid pressure opens the piston valve (21) against the coil spring load and fluid passes through the ports (7) in the piston valve from the lower half of the cylinder (A) to the upper part of the cylinder (B). The excess fluid displaced from the cylinder by the piston passes via the ports (5) in the piston rod guide (17) through the filter (6) and down the rebound valve tube (9) opening the rebound valve (10) against the coil spring load into the reservoir (C).

On the slow bump strokes, damping is controlled by calibrated bleed grooves on the face of the foot valve (13).

On the fast rebound strokes when the piston is moving relatively towards the piston rod guide (17) the piston valve (21) closes and again fluid passes through the ports (5) in the piston rod guide (17) through the filter (6) down the rebound valve tube (9) opening the rebound valve (10) against the coil spring load and into the reservoir (C). At the same time the lower part of the cylinder (A) is replenished with fluid as the foot valve plate (12) opens to allow recuperation from the reservoir (C).

On slow rebound strokes, fluid passes through a calibrated bleed groove in the face of the piston valve seat.

Any fluid which passes between the piston rod (2) and the piston rod guide bearing is prevented from escaping by the multi-lip piston rod seal (3).

Undue internal fluid pressure on this seal is relieved as the fluid passes through a port to the drain tube (18), the lower end of which is immersed in the reservoir fluid to prevent aeration.

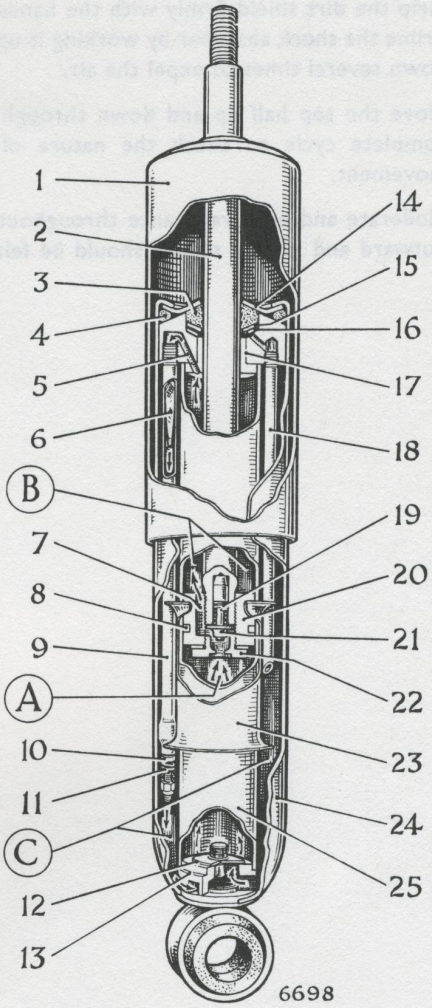

Fig. 7. *Details of shock absorber Alpine III*

Testing

When there is any question of suspension not being adequately damped, the condition of the following should be considered: road springs, tyre pressures, bump rubbers, and bump rubber seats, as these carry the full bump load of the suspension.

If a shock absorber does not appear to function satisfactorily an indication of its resistance can be obtained by carrying out the following check:—

Remove the shock absorber from its mounting. Place the shock absorber vertically in a vice. holding by the lower eye between two, pieces of wood.

Grip the dirt shield firmly with the hands and prime the shock absorber by working it up and down several times to expel the air.

Move the top half up and down through one complete cycle to check the nature of the movement.

Moderate and even resistance throughout the outward and inward stroke should be felt. If, however, the resistance is slight, erratic or free movement cannot be eliminated by priming, then the shock absorber should be changed.

No amount of hand testing will provide a true indication of the resistance of the shock absorbers at speeds obtained on bumpy roads. It will, therefore, be appreciated that a new shock absorber may appear to be weak when operated by hand, but this should not be taken as evidence of fault.